THE CORBIN CENTER ADDITION

CORBIN, WHITLEY COUNTY, KENTUCKY

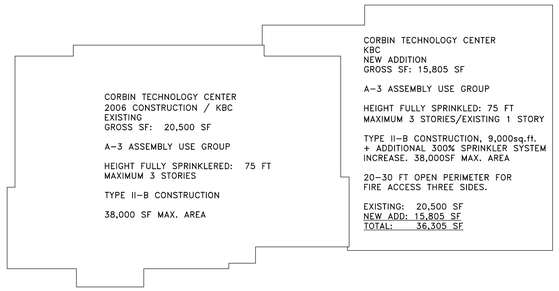

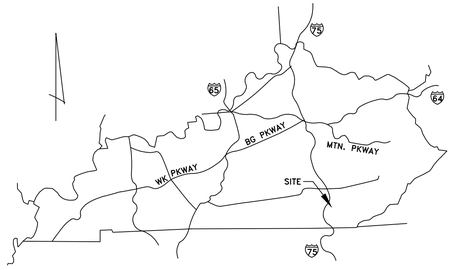

MSE OF KENTUCKY, INC.
Engineers
Architects
Planners

624 Wellington Way
Lexington, KY 40503
www.mselex.com

Phone: (859)223-5694
Fax: (859)223-2607

DATE: MAY 2025

SCHEDULE OF DRAWINGS

SITE SURVEY..... R-1
EXISITNG CONDITION & DEMOLITION PLAN..... C-1
SITE PLAN..... C-2
GRADING & EROSION CONTROL PLAN..... C-3
DETAILS..... D-1
EROSION CONTROL DETAILS..... EC-1

QUALITY ASSURANCE PLAN/STRUCTURAL DESIGN CRITERIA..... S-0.0
STRUCTURAL NOTES..... S-0.1
FOUNDATION PLAN..... S-1
ROOF FRAMING PLAN..... S-2
FOUNDATION DETAILS..... S-3
STEEL FRAMING DETAILS..... S-4
STEEL FRAMING DETAILS..... S-5

FLOOR PLAN..... A-1
EXTERIOR ELEVATIONS..... A-2
WALL SECTIONS..... A-3
WALL SECTIONS..... A-4
ROOF PLAN & DETAILS..... A-5
DOOR/WINDOW SCHEDULE & DETAILS..... A-6
INTERIOR ELEVATIONS
FINISH SCHEDULE & DETAILS..... A-7
CARPET PATTERN DETAILS..... A-8

ELECTRICAL DETAILS..... E-00
PARTIAL FLOOR PLAN - EXISTING BUILDING ELECTRICAL DEMOLITION..... E-01
PARTIAL FLOOR PLAN - EXISTING ELECTRICAL NEW WORK..... E-02
PARTIAL FLOOR PLAN - BUILDING EXPANSION POWER..... E-03
PARTIAL FLOOR PLAN - BUILDING EXPANSION LIGHTING..... E-04
PARTIAL FLOOR PLAN - BUILDING EXPANSION POWER..... E-05
PARTIAL FLOOR PLAN - EXISTING BUILDING ELECTRICAL DEMOLITION..... E-06
ELECTRICAL SCHEDULES..... E-07
FLOOR PLAN - FIRE SUPPRESSION..... FP-1
CORBIN CENTER ADDITION HVAC PLAN... M-1
PARTIAL ROOF PLAN - RTU LAYOUT AND GAS PIPING..... M-2
MECHANICAL SCHEDULES..... M-3
MECHANICAL DETAILS..... M-4
CEILING COORDINATION PLAN..... MEP-1
FLOOR PLAN - PLUMBING..... P-1
PLUMBING DETAILS..... P-2
PLUMBING SCHEDULES AND ISOMETRIC VIEWS..... P-3
SITE UTILITY PLAN - MECHANICAL..... U-1

SET NO.

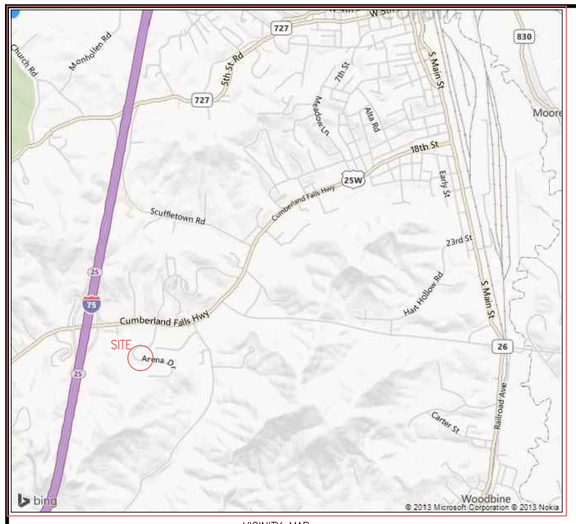

VICINITY MAP

NOTES:
1. THE PROPERTY SHOWN HEREON IS SUBJECT TO ALL EASEMENTS AND RIGHT-OF-WAYS OF RECORD AND IN EXISTENCE.
2. SURVEY IS VALID ONLY IF PRINT HAS ORIGINAL SEAL AND SIGNATURE OF SURVEYOR.
3. EXCEPT AS SPECIFICALLY STATED OR SHOWN ON THIS PLAT, THIS PLAT DOES NOT PURPORT TO REFLECT ANY OF THE FOLLOWING WHICH MAY BE APPLICABLE TO THE SUBJECT REAL ESTATE: EASEMENTS, OTHER THAN POSSIBLE EASEMENTS THAT WERE VISABLE AT THE TIME OF MAKING THIS SURVEY; BUILDING SETBACK LINES; RESTRICTIVE COVENANTS; SUBDIVISION RESTRICTIONS; ZONING AND OTHER LAND USE REGULATIONS;
4. THE PURPOSE OF THIS PLAT IS TO DEPICT THE PROPERTY OWNED BY THE CITY OF CORBIN AND TO SHOW NEW DIVISION LINES OF SAID PROPERTY.
5. ALL BEARINGS SHOWN HEREON ARE BASED ON A MAGNETIC READING TAKEN IN THE FIELD ON DECEMBER 20, 2000 NEAR THE INTERSECTION OF US 25W & CORBIN BY-PASS (KY 3041).

SURVEYOR'S CERTIFICATION
I HEREBY CERTIFY THAT THE SURVEY DEPICTED BY THIS PLAT WAS DONE BY PERSONS UNDER MY DIRECT SUPERVISION BY THE METHOD OF RANDOM TRAVERSE WITH SIDESHOTS. THE UNADJUSTED PRECISION RATIO OF THE TRAVERSE WAS 1: 35,911.2 AND WAS NOT ADJUSTED FOR CLOSURE. THE SURVEY SHOWN HEREON IS A CLASS A SURVEY AND THE ACCURACY AND PRECISION OF SAID SURVEY MEETS ALL THE SPECIFICATIONS OF THIS CLASS.

BILL ED CANNON P.L.S. 2130

STATE OF KENTUCKY
WILLIAM E. CANNON
2130
LICENSED PROFESSIONAL LAND SURVEYOR

12-6-2024
DATE

LEGEND
PROPERTY LINE
EDGE OF ASPHALT ROAD
(IRON PIN SET (IPS) 5/8" X 18" REBAR W/ YELLOW I.D. CAP BOWMAN PLS 1804
– IRON PIN FOUND (IPF) TYPE NOTED
P MAG NAIL SET

OWNER'S CERTIFICATE
I (WE) DO HEREBY CERTIFY THAT I AM (WE ARE) THE OWNER(S) OF RECORD OF THE PROPERTY SHOWN HEREON AS RECORDED IN DB.432, PG.128 IN THE WHITLEY COUNTY CLERK'S OFFICE, AND DO HEREBY ADOPT THIS SURVEY.

OWNER(S) DATE

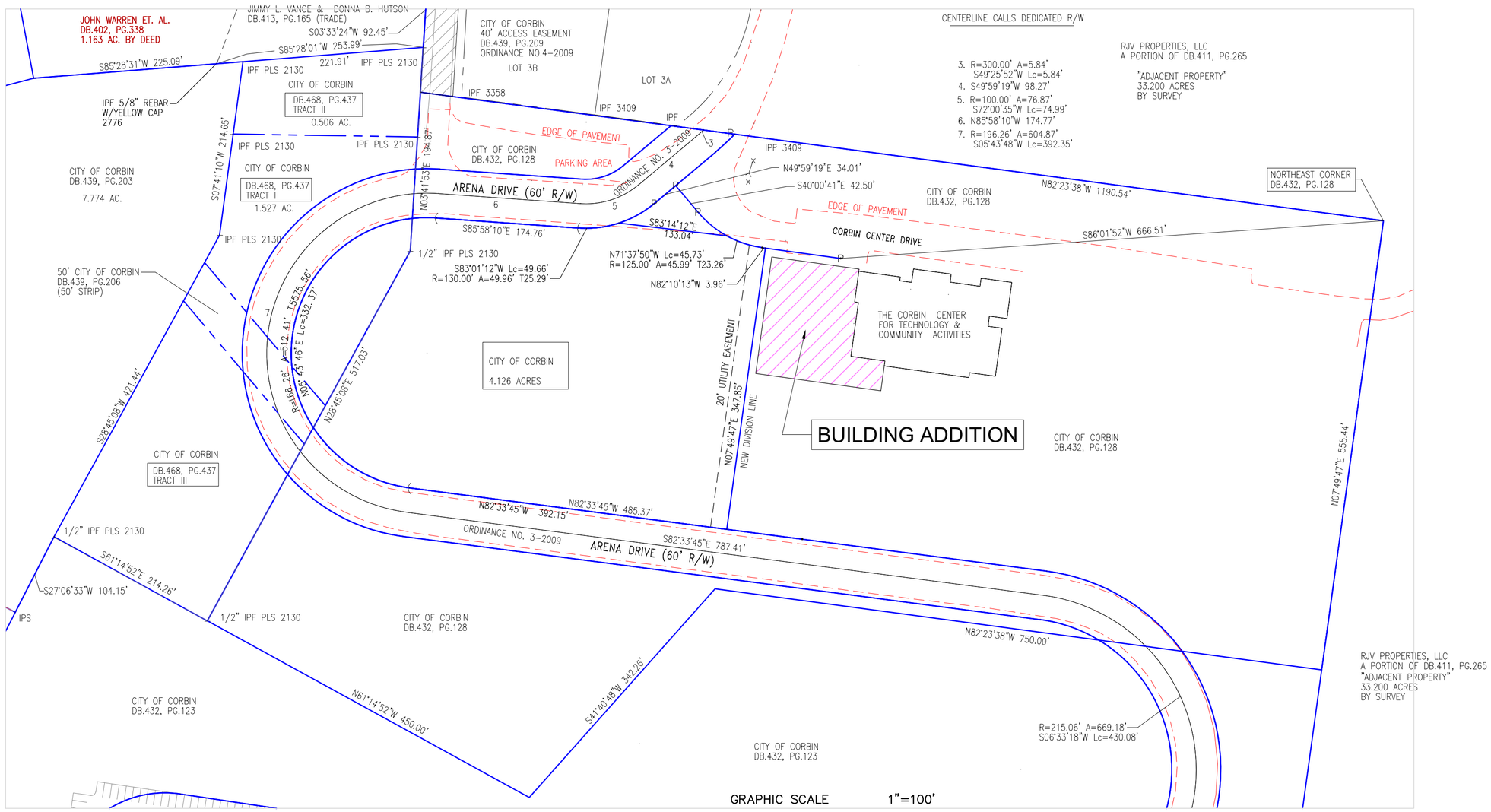

GRAPHIC SCALE 1"=100'
0 100 200 300

NOT FOR RECORDING

SURVEY OF A PORTION OF THE CITY OF CORBIN PROPERTY
LOCATED WEST OF THE CORBIN CENTER FOR TECHNOLOGY &
COMMUNITY ACTIVITIES BUILDING A PORTION OF DEED BOOK 432, PAGE 128,
DEED BOOK 468, PAGE 437 (TRACT I & III), AND DB.439, PG.206

REVISION	DATE	BY

PROJECT NO.	4137-57
FILE NAME	CORBIN HOTEL 12-6-24
DESIGNED BY	
DRAWN BY	JL
CHECKED BY	BEC
REVIEWED BY	
DATE	12-6-24
SCALE	1"=100'

BILL ED CANNON
Engineer (11715) / Surveyor (2130)
116 N Poplar Avenue
Corbin, KY 40701
Phone: (606)620-5161 / (864) 923-6010
www.billed.cannon@gmail.com

DRAWING NO.
R-1
SHEET OF

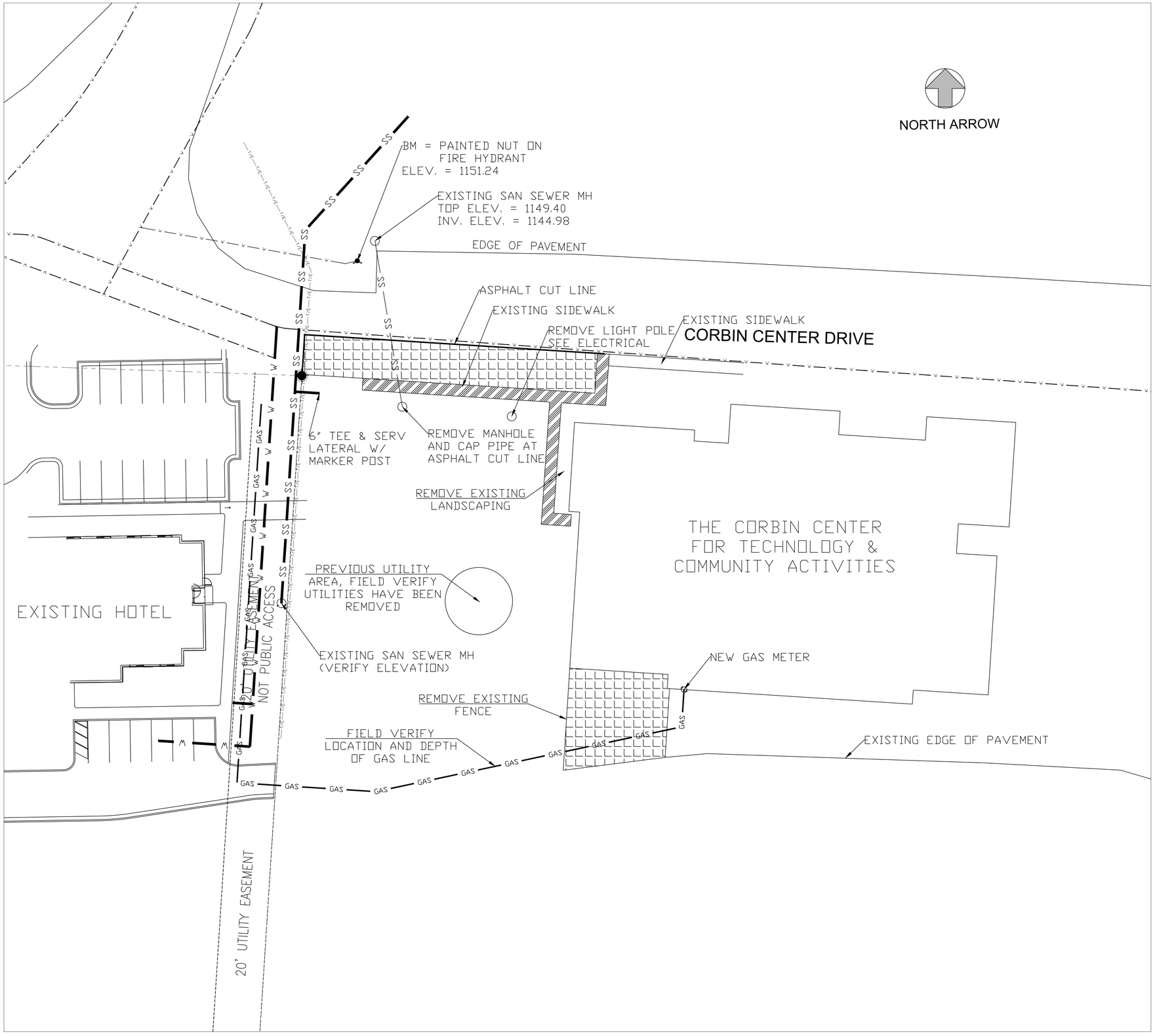

— GAS — GAS — GAS LINE

— W — W — WATER LINE

— SS — SS — SANITARY SEWER

— T/E — T/E — TELECOMMUNICATION LINE

DEMOLISH SIDEWALK AND REMOVE FROM SITE

DEMOLISH ASPHALT AND REMOVE FROM SITE

EXISTING CONDITION & DEMOLITION PLAN

CORBIN TECH CENTER ADDITON

CORBIN, KENTUCKY

DATE	REVISION	BY

PROJECT NO.	
DESIGNED BY	M.S.E
DRAWN BY	C.R.H.
CHECKED BY	G.A.R.
REVIEWED BY	G.A.R.
DATE	MARCH 2025
SCALE	1" = 20'

MSC OF KENTUCKY, INC.
Engineers
Architects
Planners
624 Wellington Way
Lexington, KY 40503
www.msckx.com
Phone: (859)223-5694
Fax: (859)223-2607

DRAWING NO.

C-1

SHEET OF

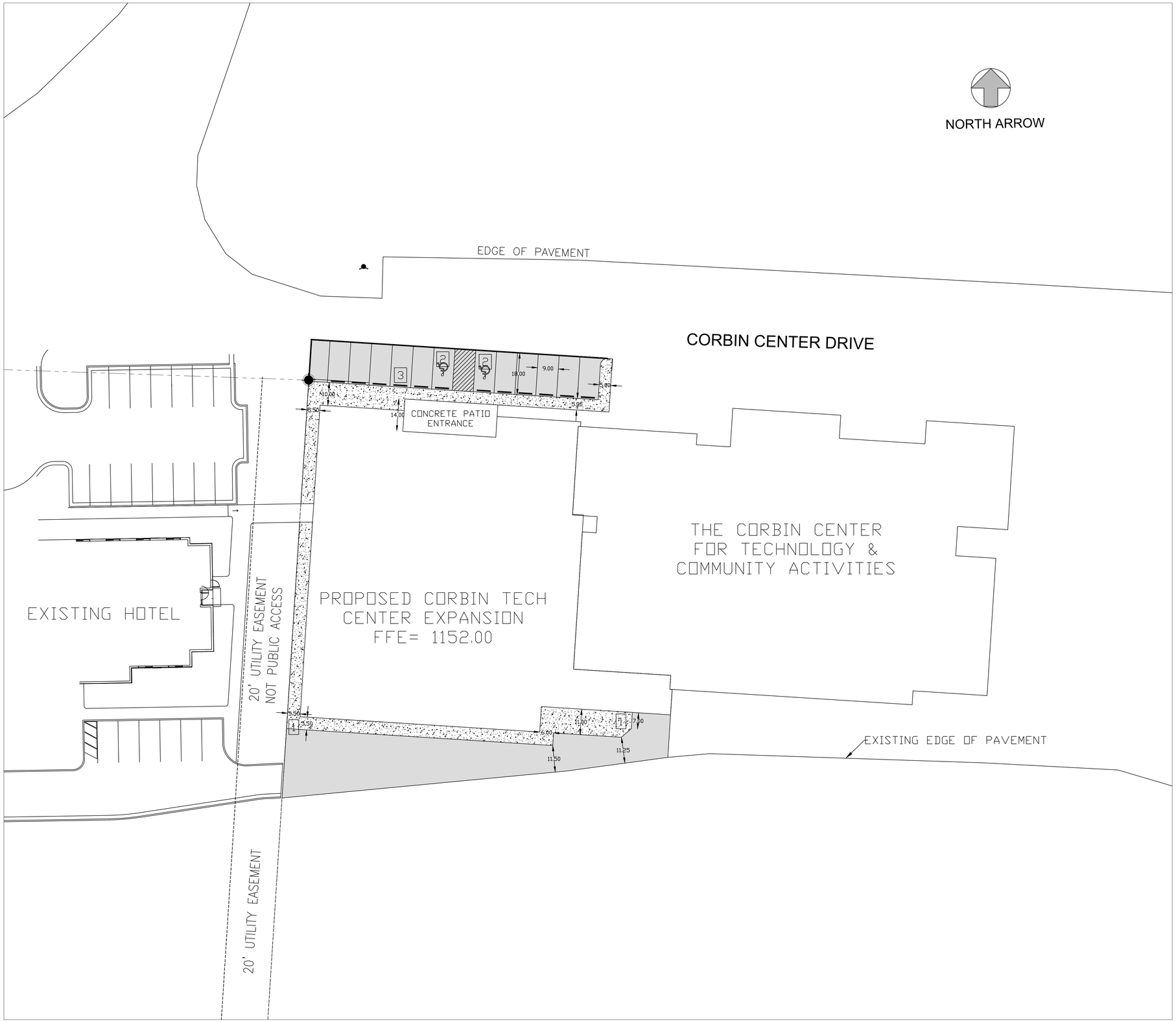

CONCRETE SIDEWALK SEE SHEET D-1 DETAIL (A)

ASPHALT PAVEMENT TO MATCH EXISTING PAVEMENT OR SEE SHEET D-1 DETAIL (B), WHICHEVER IS GREATER

1 CURB CUT SEE SHEET D-1 DETAIL (C)

2 HANDICAP STRIPING SEE SHEET D-1 DETAIL (D)

3 RUBBER WHEEL STOP SEE SHEET D-1 DETAIL (E)

SITE LAYOUT

CORBIN TECH CENTER ADDITON

CORBIN, KENTUCKY

DATE	REVISION	BY

PROJECT NO.	
DESIGNED BY	M.S.E
DRAWN BY	C.R.H.
CHECKED BY	G.A.R.
REVIEWED BY	G.A.R.
DATE	MARCH 2025
SCALE	1" = 20'

MSE OF KENTUCKY, INC.
Engineers
Architects
Planners
624 Wellington Way
Lexington, KY 40503
www.mseker.com
Phone: (859)223-5694
Fax: (859)223-2607

DRAWING NO.

C-2

SHEET OF

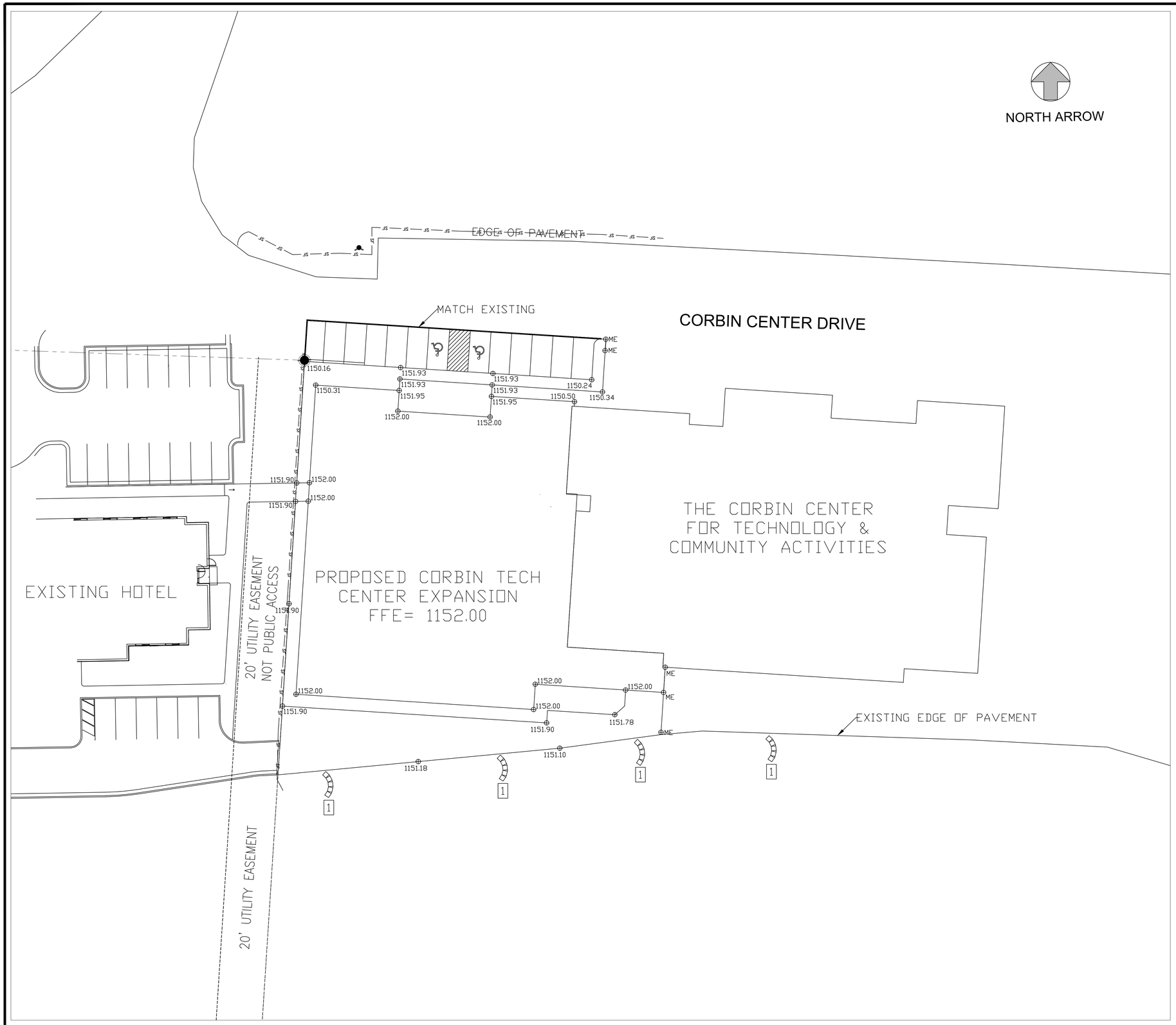

NOTE:

ALL SPOT ELEVATIONS ARE FINISHED GRADE

ME= MATCH EXISTING ELEVATION

—— SF —— SILT FENCE SEE SHEET EC-1 DETAIL (B)

[1] SILT CHECKS SHEET EC-1 DETAIL (C)

GRADING AND EROSION CONTROL PLAN
CORBIN TECH CENTER ADDITON
CORBIN, KENTUCKY

DATE	REVISION	BY

PROJECT NO.	
DESIGNED BY	M.S.E.
DRAWN BY	C.R.H.
CHECKED BY	G.A.R.
REVIEWED BY	G.A.R.
DATE	MARCH 2025
SCALE	1" = 20'

MSE OF KENTUCKY, INC.
Engineers
Architects
Planners
624 Wellington Way
Lexington, KY 40503
www.msekx.com
Phone: (859)223-5694
Fax: (859)223-2607

DRAWING NO.

C-3

SHEET OF

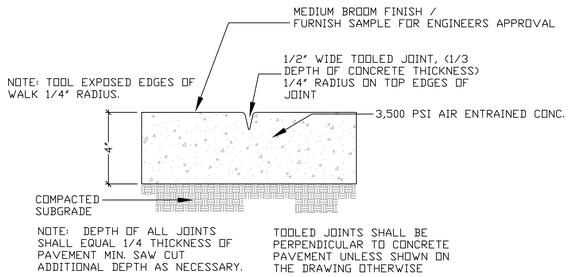

A / C-1 CONCRETE WALK / TOOLED CONTROL JOINT
NTS

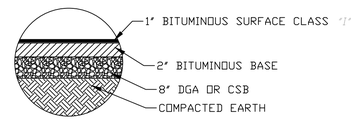

B / C-2 LIGHT DUTY PAVEMENT
NTS

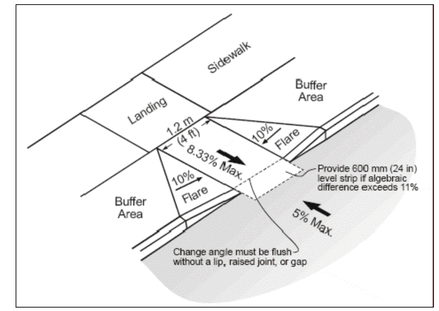

C / C-1 CONCRETE CURB CUT
NTS

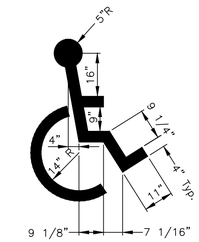

D / C-2 HANDICAP ACCESSIBILITY PAVEMENT MARKING
NTS

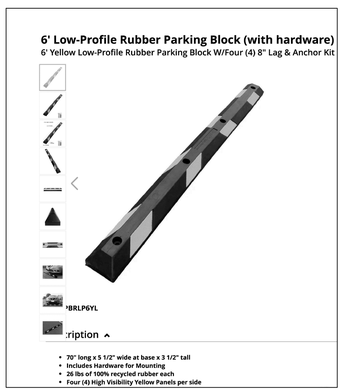

E / C-2 RUBBER WHEEL STOP
NTS

DETAILS
CORBIN TECH CENTER ADDITON
CORBIN, KENTUCKY

DATE	REVISION	BY

PROJECT NO.	
DESIGNED BY	M.S.E.
DRAWN BY	C.R.H.
CHECKED BY	G.A.R.
REVIEWED BY	G.A.R.
DATE	MARCH 2025
SCALE	AS NOTED

MSE OF KENTUCKY, INC.
Engineers
Architects
Planners
624 Wellington Way
Lexington, KY 40503
www.mseky.com
Phone: (859)223-5694
Fax: (859)223-2807

DRAWING NO.
D-1
SHEET OF

EROSION CONTROL NOTES:

THE EROSION CONTROL MEASURES NOTED BELOW ARE MINIMUMS AND DO NOT RELIEVE THE CONTRACTOR FROM THE RESPONSIBILITY FOR COMPLIANCE WITH ANY AND ALL U.S. EPA , KENTUCKY DIVISION OF WATER AND/OR LOCAL REQUIREMENTS.

CONTRACTOR SHALL ESTABLISH EROSION CONTROL MEASURES BEFORE DISTURBING SITE.

ALL EROSION CONTROL DEVICES SHALL BE PROPERLY MAINTAINED DURING ALL PHASES OF CONSTRUCTION UNTIL THE COMPLETION OF ALL CONSTRUCTION ACTIVITIES AND ALL DISTURBED AREAS HAVE BEEN STABILIZED.

ADDITIONAL CONTROL DEVICES MAY BE REQUIRED DURING CONSTRUCTION, IN ORDER TO CONTROL EROSION AND/OR OFFSITE SEDIMENTATION. ALL TEMPORARY CONTROL DEVICES SHALL BE REMOVED ONCE CONSTRUCTION IS COMPLETED AND THE SITE IS STABILIZED.

IT IS THE CONTRACTOR'S RESPONSIBILITY TO PREVENT EROSION ONTO ADJACENT PROPERTY. ANY REMEDIAL MEASURES REQUIRED TO CORRECT DAMAGE CREATED BY EROSION SHALL BE AT THE CONTRACTOR'S EXPENSE.

TOPSOIL STOCKPILES THAT ARE NOT BEING UTILIZED FOR A PERIOD OF 14 DAYS TO BE SURROUNDED BY SILT FENCE.

SILT FENCES TO BE CLEANED OUT WHEN THEY BECOME ONE-THIRD FULL.

WHEN SEASONAL CONDITIONS PROHIBIT THE APPLICATION OF TEMPORARY OR PERMANENT SEEDING, NON-VEGETATIVE SOIL STABILIZATION PRACTICES SUCH AS MULCHING AND MATTING SHALL BE USED, UNTIL SUCH TIME AS CONDITIONS PERMIT.

ALL SEDIMENT CONTROL MEASURES SHALL BE INSPECTED AT LEAST ONCE EVERY SEVEN DAYS AND AFTER ANY STORM EVENT OF GREATER THAN 0.5 INCHES OF PRECIPITATION DURING ANY 24-HOUR PERIOD. A FIELD LOG OF INSPECTIONS SHALL BE MADE AND A COPY GIVEN TO THE OWNER.

ALL SEDIMENT CONTROL FEATURES SHALL BE MAINTAINED UNTIL FINAL SOIL STABILIZATION HAS BEEN OBTAINED.

STABILIZATION MEASURES SHALL BE INITIATED AS SOON AS PRACTICAL IN PORTIONS OF THE SITE WHERE CONSTRUCTION ACTIVITIES HAVE TEMPORARILY OR PERMANENTLY CEASED, BUT NO MORE THAN 14 DAYS AFTER THE CONSTRUCTION ACTIVITY IN THAT PART OF THE SITE HAS TEMPORARILY OR PERMANENTLY CEASED UNLESS THAT ACTIVITY IN THAT PORTION OF THE SITE WILL RESUME WITHIN 21 DAYS.

THE CONTRACTOR MUST TAKE NECESSARY ACTION TO MINIMIZE TRACKING OF MUD ONTO PAVED ROADWAY FROM CONSTRUCTION AREAS. THE CONTRACTOR SHALL DAILY REMOVE MUD/SOIL FROM PAVEMENT, AS MAY BE REQUIRED

PROVIDE TRAFFIC CONTROL IN ACCORDANCE WITH THE MANUAL FOR UNIFORM TRAFFIC CONTROL DEVICES AND THE KENTUCKY DEPARTMENT OF HIGHWAYS GUIDANCE MANUAL.

MAINTAIN ACCESS TO EXISTING BUSINESSES AND EXISTING ROADS.

ALL EARTHWORK TO COMPLY WITH KENTUCKY DEPT. OF HIGHWAYS (KY-DOH SECTION 400) SPECIFICATIONS FOR ROAD AND BRIDGE CONSTRUCTION, EDITION OF 2000 AND ANY AMENDMENTS.

THE CONTRACTOR SHALL SHALL LIMIT ACCESS TO THE SITE TO THE CONSTRUCTION ENTRANCES. THE LOCATION OF THE CONSTRUCTION ENTRANCES SHALL BE APPROVED BY THE ENGINEER AND DESIGNATED ON THE SWPPP. THE CONTRACTOR SHALL INSTALL STONE SURFACE AT THE LOCATION WHERE CONSTRUCTION TRAFFIC LEAVES AND ENTERS THE SITE. THESE ACCESS POINTS SHALL BE MIN. 20' WIDE, 50' LONG, 0.5' DEEP AND USE NO 7 STONE OVER GEOTEXTILE FABRIC. THE CONTRACTOR IS RESPONSIBLE FOR KEEPING STREETS AND PARKING AREAS FREE FORM MUD, DIRT, DEBRIS, AND ROCK. DUST SHALL BE KEPT TO A MINIMUM BY UTILIZING SPRINKLING, CALCIUM CHLORIDE, VEGETATIVE COVER, SPRAY ON ADHESIVES OR OTHER APPROVED METHODS. THIS ENTRANCE SHALL BE MAINTAINED UNTIL THE STREET HAS BEEN CONSTRUCTED.

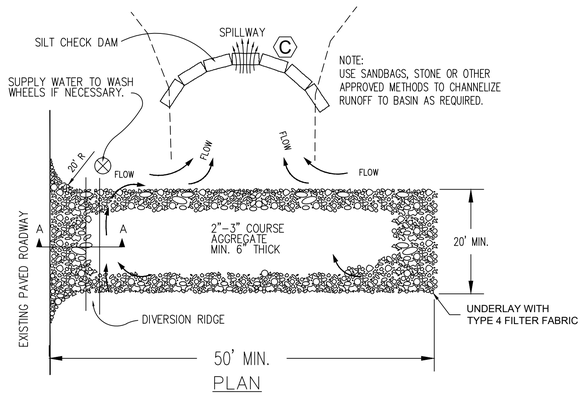

PLAN

NOTES:
1. THE ENTRANCE SHALL BE MAINTAINED IN A CONDITION THAT WILL PREVENT TRACKING OR FLOWING OF SEDIMENT ONTO PUBLIC RIGHTS-OF-WAY. THIS MAY REQUIRE TOP DRESSING, REPAIR AND/OR CLEANOUT OF ANY MEASURES USED TO TRAP SEDIMENT.
2. WHEN NECESSARY, WHEELS SHALL BE CLEANED PRIOR TO ENTRANCE ONTO PUBLIC RIGHT-OF-WAY.
3. WHEN WASHING IS REQUIRED, IT SHALL BE DONE ON AN AREA STABLIZED WITH CRUSHED STONE THAT DRAINS INTO AN APPROVED SEDIMENT TRAP OR SEDIMENT BASIN.

A TEMPORARY GRAVEL CONSTRUCTION ENTRANCE/EXIT

NTS

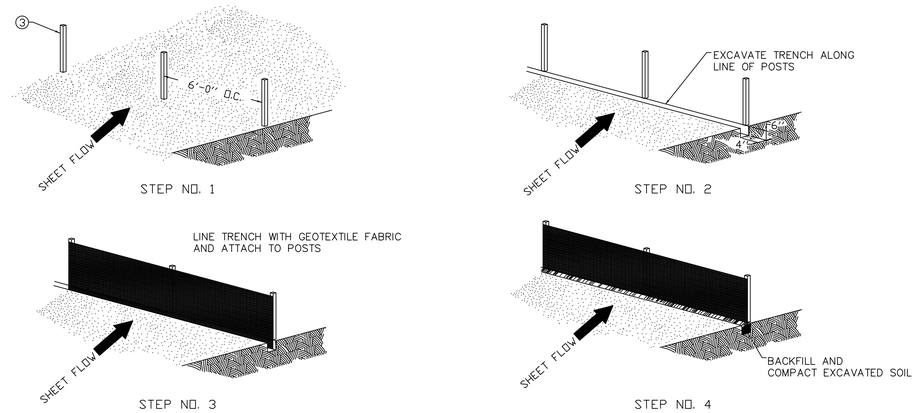

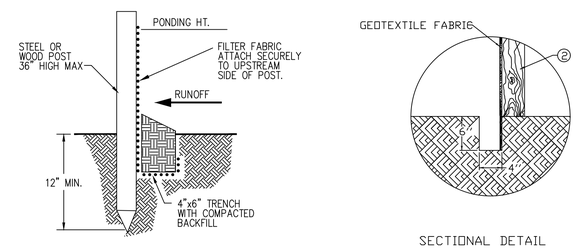

SECTIONAL DETAIL

NOTES

1. SEE STANDARD SPECIFICATIONS FOR POST SIZE, GEOTEXTILE FABRIC, WIRE STAPLES AND ALL OTHER PERTINENT INFORMATION.
2. POSTS MAY BE WOODEN OR METAL T-SECTION.
3. POSTS SHALL BE SET 1'-4" DEEP.
4. INSPECT AND REPAIR FENCE AFTER EACH STORM EVENT AND REMOVE SEDIMENT WHEN NECESSARY.
5. REMOVED SEDIMENT SHALL BE DEPOSITED TO AN AREA THAT WILL NOT CONTRIBUTE SEDIMENT OFF-SITE AND CAN BE PERMANENTLY STABILIZED.
6. SILT FENCE SHALL BE PLACED ON SLOPE CONTOURS TO MAXIMIZE PONDING EFFICIENCY.

B TEMP. SILT FENCE DETAILS

NTS

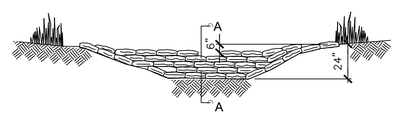

VIEW LOOKING UPSTREAM

STONE FILLED BAG CHECK DAMS MUST BE PLACED IN CHANNEL BY HAND, WITH THE TIED ENDS OF THE BAGS POINTING UPSTREAM AND THE CENTER OVERFLOW AREA AT LEAST 6" LOWER THAN THE OUTER EDGE. THE HIGHER ENDS OF THE CHECK DAM MUST TIE TO THE CHANNEL TO PREVENT BYPASS.

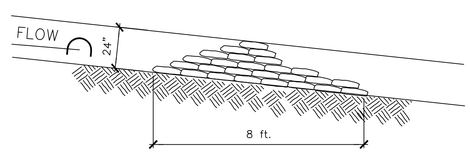

SECTION A – A

'L' = THE DISTANCE SUCH THAT POINTS 'A' AND 'B' ARE OF EQUAL ELEVATION.

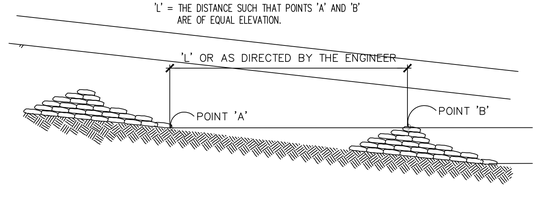

SPACING BETWEEN CHECK DAMS

C SILT CHECK DAM TYPE "D"

NTS

EROSION CONTROL DETAILS

CORBIN TECH CENTER ADDITON

CORBIN, KENTUCKY

DATE	REVISION	BY

PROJECT NO.	
DESIGNED BY	M.S.E.
DRAWN BY	C.R.H.
CHECKED BY	G.A.R.
REVIEWED BY	G.A.R.
DATE	MARCH 2025
SCALE	AS NOTED

MSE OF KENTUCKY, INC.
Engineers
Architects
Planners
624 Wellington Way
Lexington, KY 40503
www.mseky.com
Phone: (859)223-5694
Fax: (859)223-2607

DRAWING NO.

EC-1

SHEET OF

STRUCTURAL QUALITY ASSURANCE PLAN

GENERAL

THE NEW STRUCTURE TO BE CONSTRUCTED IS ASSIGNED BY THE KENTUCKY BUILDING CODE, 2018 EDITION, TO SEISMIC USE GROUP AND SEISMIC DESIGN AS SPECIFIED. AS SUCH, THE BUILDING CODE MANDATES SPECIAL INSPECTION (SECTION 1704), SPECIAL INSPECTIONS FOR WIND RESISTANCE (SECTION 1705.11). SPECIAL INSPECTIONS FOR SEISMIC RESISTANCE (SECTION 1705.12). STRUCTURAL OBSERVATION FOR SEISMIC RESISTANCE (SECTION 1704.6.1) AND STRUCTURAL OBSERVATIONS FOR WIND REQUIREMENTS (SECTION 1704.6.2). STRUCTURAL QUALITY ASSURANCE PLAN SPECIFICALLY IDENTIFIES THE RESPONSIBILITIES OF THE CONTRACTOR AND THE SPECIAL INSPECTOR IN PERFORMING THE REQUIRED TESTING AND INSPECTION OF THE STRUCTURAL WORK.

CONTRACTOR RESPONSIBILITIES

In accordance with Section 1704.4 of the Building Code, the Contractor shall submit to the Architect a written statement of responsibility that contains the following:

1. Acknowledgement of awareness of the special requirements contained within this Structural Quality Assurance Plan.
2. Acknowledgement that control shall be exercised to obtain conformance with the construction documents approved by the Building Official.
3. Procedures for exercising control with the Contractor's organization, the method and frequency of reporting, and the distribution of reports.
4. Identification and qualifications of the person(s) exercising such control and their position(s) in the organization.

The Structural Testing / Inspection Agency that is to act as the Special Inspector will be hired by the Owner.

Contractor shall pay for any additional structural testing/inspection required for work or materials not complying with the Construction Documents due to negligence or nonconformance and shall pay for any additional structural testing/inspection required for his convenience.

The Contractor is responsible to ensure that the Special Inspector is present for all work requiring special inspection. Any work that requires special inspection and is performed without the Special Inspector being present is subject to being demolished and reconstructed.

The Contractor has the following responsibilities to the Special Inspector:

1. Provide copy of Construction Documents to the Special Inspector.
2. Notify the Special Inspector sufficiently in advance of operations to allow assignment of personnel and scheduling of tests.
3. Cooperate with Special Inspector and provide access to work.
4. Provide samples of materials to be tested in required quantities.
5. Provide storage space for the Special Inspector's exclusive use, such as for storing and curing concrete testing samples.
6. Provide labor to assist the Special Inspector in performing tests/inspections.

SOILS & ROCK BEARING

The Special Inspector shall perform the following:

1. Verify structural fill complies with specifications and the geotechnical report.
2. Observe proofrolling.
3. Perform field density tests to verify compaction of structural fill. As a minimum, perform one test per lift for every 2500 square feet of fill placed.
4. Inspect footing trenches & ensure proper bearing on rock & conc. fill to rock per geotechnical report and specifications.

NON-SHRINK GROUT UNDER STEEL BASE PLATES

The Special Inspector shall perform the following:

1. Compressive strength tests per ASTM C109.
2. Number of Tests: One test for each ten bags of grout used or minimum of one test for each day of grouting.
3. Cube Size: 2-inch x 2-inch.
4. Test Schedule: One cube at 3 days, two cubes at 7 days, three cubes at 28 days.

STEEL JOISTS

The Contractor shall perform the following:

1. Joists shall be manufactured and designed in accordance with the Steel Joist Institute specifications. Submit letter of compliance.
2. Submit shop drawings from a SJI certified firm. The Special Inspector shall perform periodic inspections of the following:
3. Visual inspection of bolted and welded connections.
4. Verify installation of bridging or braces.
5. Verify connection for top and bottom chords.
6. Verify reinforcement of members for concentrated loads.
7. Verify proper bearing.

CAST-IN-PLACE CONCRETE

The Contractor shall perform the following:

1. Establish concrete mix design proportions per ACI 318, Chapter 5. Submit 5 copies (minimum) of the concrete mix designs. Include the following:
   a. Type and quantities of materials
   b. Slump
   c. Air content
   d. Fresh unit weight
   e. Aggregates sieve analysis
   f. Design compressive strength
   g. Location of placement in structure
   h. Method of placement
   i. Method of curing
   j. Seven-day and 28-day compressive strengths
2. Submit a certification from each manufacturer or supplier stating that materials meet the requirements of the specified ASTM and ACI standards.
3. Submit certification that the ready-mixed concrete plant complies with the requirements of the National Ready Mix Concrete Association.

The Special Inspector shall perform the following:

1. Verify quantity, location, and placement of reinforcing steel prior to concrete placement.
2. Examine concrete in truck to verify that concrete appears properly mixed.
3. Perform a slump test as deemed necessary for each concrete load. Record if water or admixtures are added to the concrete at the job site. Perform additional slump tests after job site adjustments.
4. Mold four specimens per set for compressive strength testing; one set for each 50 cubic yards (or portion thereof) of each mix design in any one day. For each set set molded, record:
   a. Slump
   b. Air content
   c. Unit weight
   d. Temperature, ambient and concrete
   e. Location of placement
   f. Any pertinent information, such as addition of water, addition of admixtures, etc.
5. Perform one 7-day and two 28-day compressive strength tests. (Use one as a spare to be broken as directed by the Structural Engineer if compressive strengths do not appear adequate.)
6. Reports of compressive strength tests shall contain the project identification name and number, date of concrete placement, concrete design compressive strength, location of concrete placement in structure, concrete mix proportions and materials, compressive breaking strength and type of break.

STEEL DECK

The Contractor shall perform the following:

1. Submit mill certification that the supplied steel complies with the specifications. The Special Inspector shall perform periodic inspections of the following:
2. Verify general alignment and deck lap.
3. Verify screws/welds for size and pattern.
4. Verify spacing and type of side lap attachments.
5. Verify installation of deck closures.

STRUCTURAL STEEL

The Contractor shall perform the following:

1. The steel fabricator shall be AISC or AWS Certified, refer to Spec. 05120.
2. Submit certified mill test reports for structural steel.
3. Submit manufacturer's certificate of compliance fro high-strength bolting and weld filler materials.

** If the fabricator is not certified, then the fabricator shall reimburse the owner for the costs of these tests.

The Special Inspector shall perform the following:

1. Provide continuous inspection to verify compliance of the following:
   a. Inspection of slip-critical connections, except periodic inspection may be performed when using torque control bolts (twist off)
   b. Complete and partial penetration groove welds. Ultrasonically inspect 100% of the complete penetration welds.
   c. Multi-pass fillet welds and single-pass fillet welds greater than 5/16".
2. Provide periodic inspection to verify compliance of the following:
   a. Material verification of high-strength bolts, nuts, and washers.
   b. Material verification of structural steel.
   c. Material verification of weld filler material.
   d. Anchor bolt size, configuration, and embedment shall be verified prior to placement of concrete.
   e. Visually inspect all field-welded connection. Visual inspection of welded joints includes periodic examination of fitup.
   f. Verify stud shear connector spacing and location. Visually inspect welding of stud shear connectors.
3. Weld Inspections:
   a. Weld inspections shall be in accordance with AWS D1.1.
   b. Review and verify compliance of written welding procedures with AWS requirements.
   c. Verify that welding procedures are being adhered to during field welding.
   d. Verify welder qualifications.
   e. Use all means necessary to determine the quality of welds. The inspector may use gamma ray, magnafluz, trepanning, sonics or any other aid to visual inspection that the Special Inspector may deem necessary to be assured of the adequacy of the welding.
   f. Keep a systematic record of all welds that include, in addition to other required records, the identification marks of welders, a list of defective welds, and the manner of correcting defects.
4. Bolting inspection and testing shall be in accordance with AISC Specifications for Structural Joints Using ASTM A325 or A490 Bolts.

SPECIAL INSPECTOR RESPONSIBILITIES

The Special Inspector shall maintain records of inspections in accordance with Section 1704.1.2 and shall distribute these records to the Architect and Structural Engineer on a weekly basis. At the conclusion of the project, the Special Inspector shall submit a final report including a written statement that the special inspections during construction have complied with this Structural Quality Assurance Plan and that any discrepancies noted during construction have been corrected.

SPECIAL INSPECTIONS PER CHAPTER 17 OF THE KENTUCKY BUILDING CODE

SECTION	ITEM	REQUIRED? YES	REQUIRED? NO	REMARKS
1704.2.5	FABRICATORS		X	STEEL FABRICATION SPECIAL INSPECTION IS REQUIRED IF THE FABRICATOR IS NOT A.I.S.C. OR AWS CERTIFIED.
1704.6.1	STRUCTURAL OBSERVATION FOR SEISMIC REQUIREMENTS		X	SEISMIC DESIGN CATEGORY "B"
1704.6.2	STRUCTURAL OBSERVATION FOR WIND REQUIREMENTS		X	Vasd = 93mph.
1705.2	STEEL	X		PER AISC 360 & TABLE 1705.2.2
1705.3	CONCRETE	X		PER TABLE 1705.3
1705.4	MASONRY		X	NONE
1705.5	WOOD		X	NONE
1705.6	SOILS	X		PER TABLE 1705.6
1705.7	DRIVEN DEEP FOUNDATIONS		X	NONE
1705.8	CAST IN PLACE DEEP FOUNDATIONS		X	NONE
1705.9	HELICAL PILE FOUNDATIONS		X	NONE
1705.11.1	WIND – STRUCTURAL WOOD		X	Vasd = 93mph.
1705.11.2	WIND – COLD FORMED STEEL FRAMING		X	NONE
1705.11.3	WIND – WIND RESISTING COMPONENTS		X	NONE
1705.12.1	SEISMIC – STRUCTURAL STEEL		X	SEISMIC DESIGN CATEGORY "B"
1705.12.2	SEISMIC – STRUCTURAL WOOD		X	PER SECTION 1705.12.2
1705.12.3	SEISMIC – COLD FORMED STEEL FRAMING		X	NONE
1705.12.4	DESIGNATED SEISMIC SYSTEMS		X	NONE
1705.12.5	SEISMIC – ARCHITECTURAL COMPONENTS – INTERIOR/EXTERIOR NON-LOAD BEARING WALLS AND VENEER IN STRUCTURES		X	SEISMIC DESIGN CATEGORY "B"
1705.12.6	SEISMIC – MECHANICAL AND ELECTRICAL COMPONENTS		X	SEISMIC DESIGN CATEGORY "B"
1705.12.7	SEISMIC – STORAGE RACKS AND ACCESS FLOORS		X	NONE
1705.14	SPRAYED FIREPROOFING	X		1705.14
1705.15	FIREPROOFING	X		1705.14
1705.16	E.I.F.S.	X		PER SECTION 1705.16
1705.17	FIRE RESISTANT PENETRATIONS & JOINTS		X	NONE
1705.18	SMOKE CONTROL		X	NONE

EARTHQUAKE DESIGN DATA

RISK CATEGORY	II
IMPORTANCE FACTOR	1.0
S_S	0.287
S_1	0.095
SITE CLASS	B
S_{DS}	0.172
S_{D1}	0.051
SEISMIC DESIGN CATEGORY	B
BASIC SEISMIC-FORCE RESISTING SYSTEM	STEEL ORDINARY CONCENTRICALLY BRACED FRAMES
DESIGN BASE SHEAR	0.0677xW
SEISMIC RESPONSE COEFFICIENT (C_S)	0.0677
RESPONSE MODIFICATION FACTOR	$3^1/_4$
ANALYSIS PROCEDURE	ELFP

SNOW DESIGN DATA

GROUND SNOW LOAD (P_g)	15 PSF
MINIMUM SLOPED ROOF SNOW LOAD (P_{m})	16.5 PSF
FLAT ROOF SNOW LOAD (P_f)	11.4 PSF
IMPORTANCE FACTOR	1.2
THERMAL FACTOR (C_t)	1.1
SNOW EXPOSURE FACTOR (C_e)	0.9

DESIGN LIVE LOADS

FLOORS	100 PSF

WIND DESIGN DATA

ULTIMATE DESIGN WIND SPEED (V_{ult})	115 MPH
NOMINAL DESIGN WIND SPEED (V_{asd})	89 MPH
RISK CATEGORY	II
WIND EXPOSURE CATEGORY	B
INTERNAL PRESSURE COEFFICIENT	+/- 0.18

COMPONENTS AND CLADDING [H<30 FT]

	EXPOSURE B (PSF)		EXPOSURE C (PSF)	
ROOF 0 TO 7 DEGREES				
INTERIOR ZONE	9.7	-23.8	13.5	-33.3
END ZONE	9.7	-39.9	13.5	-55.8
CORNER ZONE	9.7	-60.1	13.5	-84.1
ROOF >7 TO 27 DEGREES				
INTERIOR ZONE	13.7	-21.8	19.1	-30.5
END ZONE	13.7	-37.9	19.1	-50.0
CORNER ZONE	13.7	-56.0	19.1	-78.4
ROOF 27 TO 45 DEGREES				
INTERIOR ZONE	21.8	-23.8	30.5	-33.3
END ZONE	21.8	-27.8	30.5	-38.9
CORNER ZONE	21.8	-27.8	30.5	-38.9
WALLS				
INTERIOR ZONE	23.8	-25.8	33.3	-36.1
END ZONE	23.8	-31.9	33.3	-44.6

POAGE ENGINEERS & ASSOCIATES
880 Sparta Court
Suite 200
Lexington, KY 40504
Phone: (859) 255-9034
Fax: (859) 252-3130

STATE OF KENTUCKY CHRISTOPHER S. FELTY 27516 PROFESSIONAL ENGINEER
11/8/2024

BUILDING ADDITION
TO
THE CORBIN CENTER
CORBIN, KENTUCKY

DATE	REVISION	BY

PROJECT NO.	4137-64
DESIGNED BY	CSK
DRAWN BY	SRF(p24167)
CHECKED BY	CSK
REVIEWED BY	
DATE	11-8-2024
SCALE	

MSE OF KENTUCKY, INC.
Engineers
Architects
Planners
624 Wellington Way
Lexington, KY 40503
www.msedesc.com
Phone: (859)223-5694
Fax: (859)223-2607

DRAWING NO.
S-0.0

SHEET OF

POAGE/24167/11-8-24/SRF

GENERAL

1. Reference to standards or specifications of technical societies, organizations, or associations, or to codes of local/state authorities, means the latest standard, specification, or code adopted by the date shown on the Drawings, unless specifically noted otherwise.

2. Material, workmanship, and design shall conform to the referenced Building Code.

3. For dimensions not shown in the Structural Drawings, see the Architectural Drawings.

4. Contractor responsibilities include, but are not limited to, the following:

   4.1 Coordinate the Structural Documents with the Architectural, Mechanical, Electrical, Plumbing, and Civil Documents. Architect/Structural Engineer shall be notified of any discrepancy or omission.

   4.2 The structure is stable only in its completed form. Temporary supports required for stability during all intermediate stages of construction shall be designed, furnished, and installed by the Contractor.

   4.3 Contractor has sole responsibility for job site safety and complying with all health and safety precautions as required by any regulatory agency. In performing construction observation visits to the job site, for the Contractor's means, methods, sequences, techniques, or procedures in performing the work.

5. Contractor shall field verify all existing conditions, elevations, and site conditions prior to construction and fabrication. Contractor shall immediately notify Structural Engineer of any existing conditions that are in conflict with the Structural Documents.

CONCRETE

1. All concrete shall conform and be designed, mixed, placed, tested, and cured in accordance with the provisions of the ACI Manual of Concrete Practice, (current edition). Special care shall be taken in curing floors, stairs, walls, and other exposed surfaces in accordance with the specifications.

2. All concrete shall develop 4,000 PSI compressive strength in 28 days.

   A. W/C ratio, 0.45 for interior slabs and 0.46 for other concrete.

   B. Flyash substitution is only permitted in slabs with a 15% max. content. Flyash substitution is NOT permitted in foundations.

   C. Concrete structures and slabs exposed to freeze/thaw or subject to hydraulic pressure: air content 3% to 5%.

   D. Other concrete, air content 2% to 4%

   E. Slump limits (without a water reducer)
      - Ramps & sloping surfaces: no more than 3"
      - Reinforced foundations not less than 1" not more than 5"
      - Other concrete not less than 1" not more than 5"

3. Dropping the concrete in excess of 10 feet, depositing in a large quantity at any point and running or working it along the forms, or any method tending to cause segregation or separation of the aggregates will not be permitted.

REINFORCEMENT STEEL

1. Reinforcement steel shall have a minimum yield strength of 60,000 PSI and conform with material specifications for reinforcing bars, ASTM A615 thru A617; see manual of standard practice, Concrete Reinforcing Steel Institute.

2. Welded wire fabric shall conform to ASTM A185.

3. All rebars shall be securely tied and held in place with a minimum concrete protection cover to all steel as follows:

Walls, Columns, Beams, and Pilasters	$1\frac{1}{2}$"
Slabs	$\frac{3}{4}$"
Footings	3"

4. Reinforcing steel bends shall be made as per diagram, and/or in accordance with A.C.I. Code.

5. Lap all splices as specifically called for, but at least 38 bar diameters for bars less than or equal to #6, and 48 bar diameters, for bars greater than #6, (always 12 in. minimum) unless noted otherwise. Lap all splices in masonry reinforcement a minimum of 48 bar diameters.

FOUNDATION DESIGN

1. Foundations were designed using an assumed maximum rock bearing pressure of 3,000 PSF. This verification shall be performed by Licensed Geotechnical Engineer. Refer to Geotechnical report for proof rolling & other requirements.

GRADE SUPPORTED FLOOR SLABS

1. The following features are required as part of grade support slab construction:

   A. Keep the crushed stone moist, but not wet, immediately prior to slab concrete placement to minimize curling of the slab due to differential curing conditions between the top and bottom of the slab.

   B. The Special Inspector shall review the actual subgrade conditions prior to slab construction and to make recommendations for any unsuitable conditions encountered.

   C. Slab subgrade conditions are also considered earthwork areas; thus, the recommendations contained in the Earthwork section of the report apply.

STRUCTURAL STEEL

1. Steel Shapes

   1.1 W-Shapes: ASTM A992 (Grade 50)

   1.2 Angles, Channels, Plates, UNO: ASTM A36

   1.3 Square/Rectangular/Round Hollow Structural Sections (HSS): ASTM A500, Grade B

   1.4 Structural steel exposed to weather shall be galvanized.

2. Anchor Rods, Bolts, and Studs

   2.1 Anchor Rods: ASTM F1554, Grade 36. Headed Rods or threaded rods with plate washer and heavy hex nut.

   2.2 All bolts for structural steel joint fasteners shall be 3/4"DIA. high strength structural bolts, ASTM A325, Torque Control (Tension Set), unless otherwise noted.

3. Post-Installed Anchors: The procedure listed below are the design basis for these project. Installation of expansion anchors shall be in accordance with the ICC ES report and manufacturer's instructions for the particular anchor.

   3.1 Expansion Anchors: Hilti Kwik Bolt TZ (ICC-ES ESR-1917), Simpson Strong-Bolt 2 (ICC-ES ESR-3037), or Power-Stud+ SD2 (ICC_ES ESR-2502). Minimum embedment = 6 times anchor diameter, UNO.

   3.2 Adhesive Anchors

      3.2.1 All-thread steel anchor conforming to ASTM A307, Grade A or ASTM A36, zinc plated in accordance with ASTM B633.

      3.2.2 Adhesive conforming to Hilti Hit RE 500 SD (ICC-ES AC308), Simpson SET-XP Epoxy-Tie (ICC-ES ESR-2508), or Powers PE1000+ Epoxy Adhesive (ICC-ES ESR-2583), or Powers AC100+ Gold Adhesive (ICC_ES ESR-2582). Minimum embedment = 6 times anchor diameter, UNO.

      3.2.3 For hollow concrete masonry, use screen tube approved by manufacturer and an adhesive conforming to Simpson Strong-Tie SET (ICC-ES ESR-1772).

   3.3 Screw Anchors: Simpson Titan-HD (Concrete: ICC-ES ESR-2713; Grouted Masonry: ICC-ES ESR-1056) or Powers Wedge-Bolt+ (ICC-ES ESR-2526). Minimum Embedment = 6 times anchor diameter, UNO.

   3.4 Substitutions will only be considered for products have a code report recognizing the product for the appropriate application. The substitution request shall be accompanied by calculations that demonstrate the substituted product is capable of achieving the equivalent performance values of the design-basis product.

4. Structural steel shall be fabricated and erected according to the "Specification for Structural Steel Buildings" dated July 7, 2016 and the AISC "Code of Standard Practice for Steel Buildings and Bridges" dated June 15, 2016.

5. Connections shall be detailed based on the design information provided in the Structural Documents

   5.1 Standard Shear Connections: Details as bolted or welded double-angle, sible-plate, single-angle, or tee connections in accordance with the connection tables in the "Manual of Steel Construction", Thirteenth Edition.

      5.1.1 Shear connections not defined in the AISC Manual shall be designed by an Engineer licensed in the project state. This design service shall be included in the Contractor's scope of services. Shop drawings of such connections shall be sealed by the Engineer.

   5.2 Factored Design Forces/Reactions: As shown on the Structural Drawings or, if not shown, the factored design reaction shall be half of the "Maximum Total Uniform Load (LRFD)" tabulated in the "Manual of Steel Construction", Thirteenth Edition.

   5.3 Steel connections not specifically detailed in the Structural Drawings shall be designed by the Contractor. This design service shall be included in the Contractor's scope of services. Shop drawings of such connections shall be sealed by an Engineer licensed in the project state.

6. Shop Drawings: Submittal shall adequately depict structural members and connections.

7. All structural steel shall be fabricated and erected in accordance with the latest OSHA regulations regarding steel erection.

NOTE TO CONTRACTOR:

The contractor shall coordinate the Structural Drawings with the Architectural, Mechanical, and Electrical Drawings and make certain all pipes, sleeves, ducts, inserts, and openings are located and in place before each concrete pour.

The Contractor shall verify all dimensions shown on the Structural Drawings with dimensions shown on the Architectural Drawings. The Contractor shall check and approve, with reasonable promptness, shop drawings and schedules for coordination of details, sizes, fitting tolerances, and dimensions. The Contractor shall stamp or sign these drawings and schedules with his approval and then submit them to the Architect for review.

POAGE & ASSOCIATES ENGINEERS
880 Sparta Court
Suite 200
Lexington, KY 40504
Phone: (859) 255-9034
Fax: (859) 252-3130

STATE OF KENTUCKY CHRISTOPHER S. REILY 37516 PROFESSIONAL ENGINEER
11/8/2024

BUILDING ADDITION
TO
THE CORBIN CENTER
CORBIN, KENTUCKY

DATE	REVISION	BY

PROJECT NO. 4137-64
DESIGNED BY CSK
DRAWN BY SRF(p24167)
CHECKED BY CSK
REVIEWED BY
DATE 11-8-2024
SCALE

MASE OF KENTUCKY, INC.
Engineers
Architects
Planners
624 Wellington Way
Lexington, KY 40503
www.masekx.com
Phone: (859)223-5694
Fax: (859)223-2607

DRAWING NO.
S-0.1
SHEET OF

POAGE/24167/11-8-24/SRF

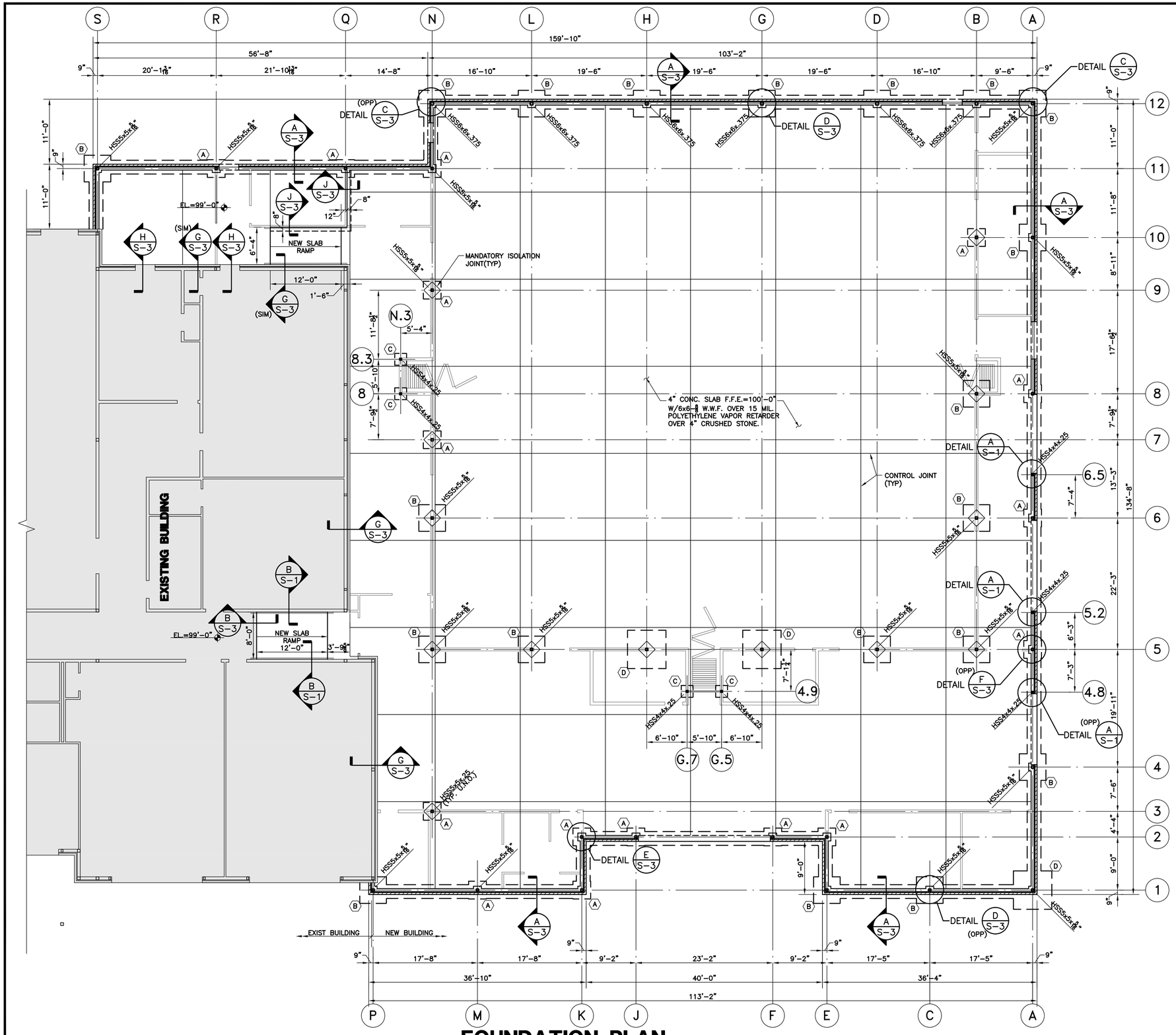

FOUNDATION PLAN

—INDICATES EXISTING CONSTRUCTION

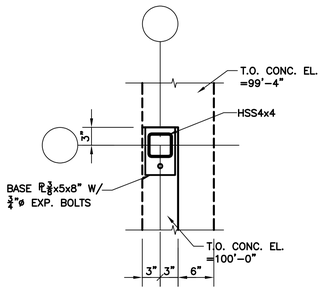

SECTION A/S-1

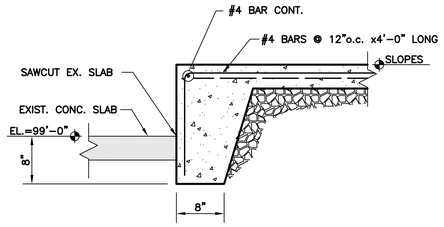

SECTION B/S-1

NOTES:

1) DATUM ELEVATION 570.1 = 100'-0" ASSUMED.
2) CONTRACTOR SHALL COORDINATE FLOOR DRAINS AND ELECTRICAL CONDUITS WITH MECHANICAL, ELECTRICAL AND PLUMBING DRAWINGS NOT SHOWN ON THE STRUCTURAL DRAWINGS.
3) ALL DIMENSIONS SHOWN ARE TO FOUNDATION WALL.
4) REFER TO ARCHITECTURAL DRAWINGS FOR LOCATIONS OF ALL INTERIOR NONLOAD-BEARING WALLS NOT LOCATED ON STRUCTURAL DRAWINGS.

FOOTING SCHEDULE

MARK	FOOTING SIZE	REINFORCING STEEL
A	3'-6"x3'-6"x12"	4-#5 BARS EACH WAY
B	4'-6"x4'-6"x18"	4-#5 BARS E.W. (TOP & BOT)
C	2'-0"x2'-0"x12"	3-#5 BARS EACH WAY
D	5'-6"x5'-6"x18"	6-#5 BARS E.W. (TOP & BOT)

POAGE ENGINEERS & ASSOCIATES
880 Sparta Court
Suite 200
Lexington, KY 40504
Phone: (859) 255-9034
Fax: (859) 252-3130

STATE OF KENTUCKY CHRISTOPHER R. SEAY 37515 PROFESSIONAL ENGINEER 11/8/2024

BUILDING ADDITION TO THE CORBIN CENTER
CORBIN, KENTUCKY

DATE	REVISION	BY

PROJECT NO.	4137-64
DESIGNED BY	CSK
DRAWN BY	SRF(p24167)
CHECKED BY	CSK
REVIEWED BY	
DATE	11-8-2024
SCALE	

MSE OF KENTUCKY, INC.
Engineers Architects Planners
624 Wellington Way
Lexington, KY 40503
www.msekx.com
Phone: (859)223-5694
Fax: (859)223-2607

DRAWING NO.

S-1

SHEET OF

POAGE/24167/11-8-24/SRF

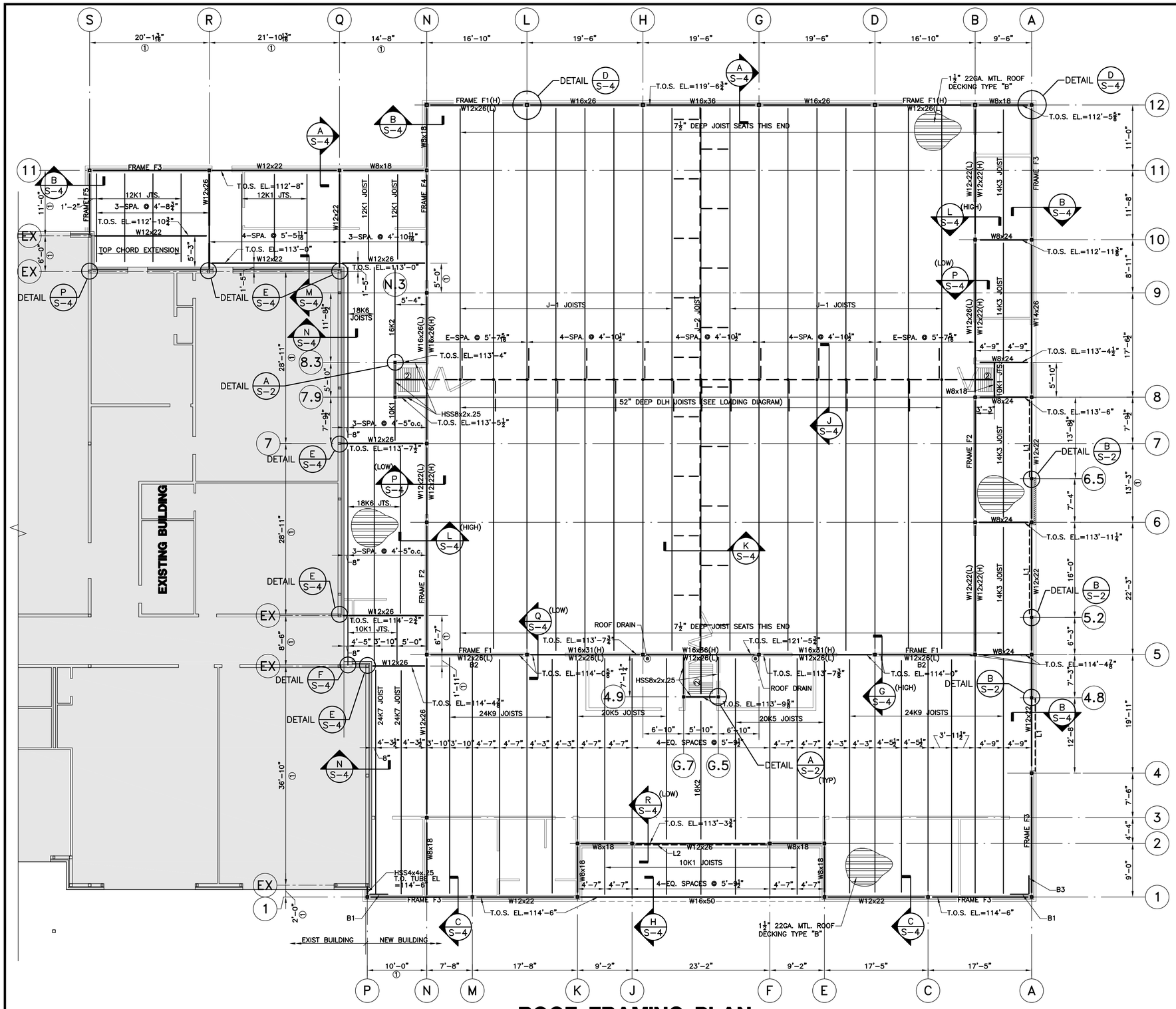

ROOF FRAMING PLAN

① FIELD VERIFY TO ALIGN W/EXIST. COLUMN ℄

② W6x16 W/BOTTOM C8x11.5 (B.O.S. EL.=112'-6"(±) VERIFY W/PARTITION MANUF.

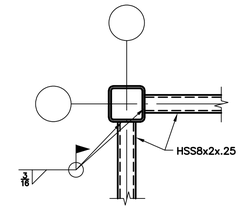

DETAIL A S-2

L1 – HSS8x4x.25 W/BOT. PL¼x11" (GALVANIZED)
BOT. OF PL EL.=110'-4"

L2 – HSS8x4x.25 W/BOT. PL¼x11" (GALVANIZED)
ROLLED ON RADIUS

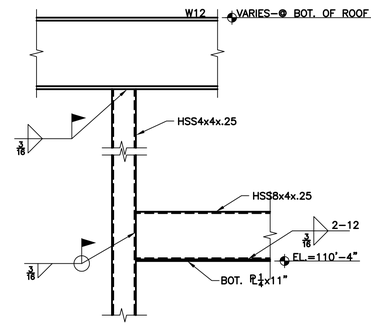

DETAIL B S-2

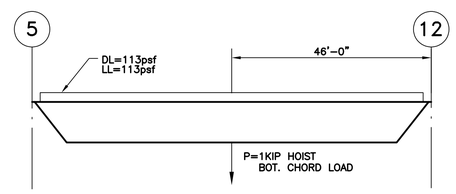

JOIST J-1 LOADING

I MIN. = 4000 IN⁴

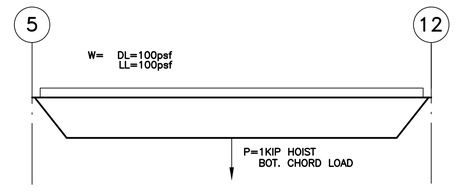

JOIST J-2 LOADING

I MIN. = 7000 IN⁴

POAGE ENGINEERS & ASSOCIATES
880 Sparta Court
Suite 200
Lexington, KY 40504
Phone: (859) 255-9034
Fax: (859) 252-3130

STATE OF KENTUCKY CHRISTOPHER S. FRY 37515 PROFESSIONAL ENGINEER 11/8/2024

BUILDING ADDITION
TO
THE CORBIN CENTER
CORBIN, KENTUCKY

REVISION	BY
DATE	

PROJECT NO.	4131-64
DESIGNED BY	CSK
DRAWN BY	SRF(24167)
CHECKED BY	CSK
REVIEWED BY	
DATE	11-8-2024
SCALE	

MSE OF KENTUCKY, INC.
Engineers
Architects
Planners
624 Wellington Way
Lexington, KY 40503
www.mseinc.com
Phone: (859)223-5694
Fax: (859)223-2607

DRAWING NO.

S-2

SHEET OF

POAGE/24167/11-8-24/SRF

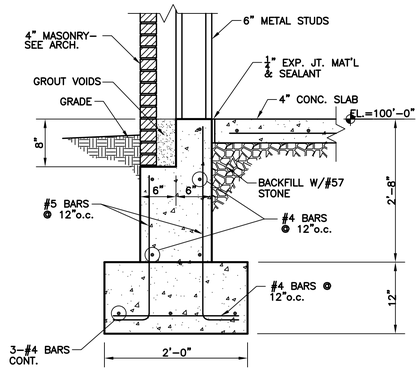

SECTION A S-3

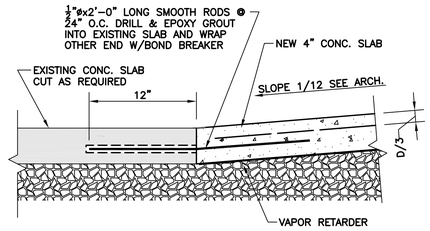

SECTION B S-3

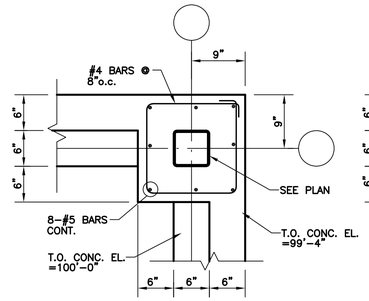

DETAIL C S-3

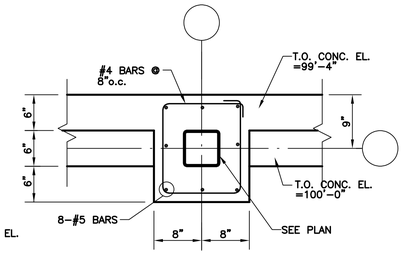

DETAIL D S-3

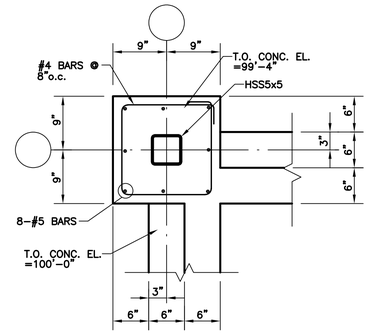

DETAIL E S-3

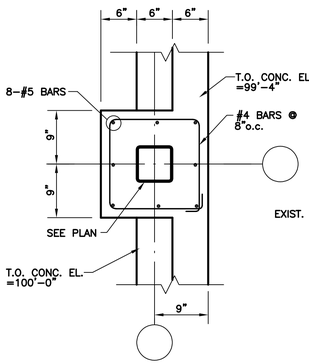

DETAIL F S-3

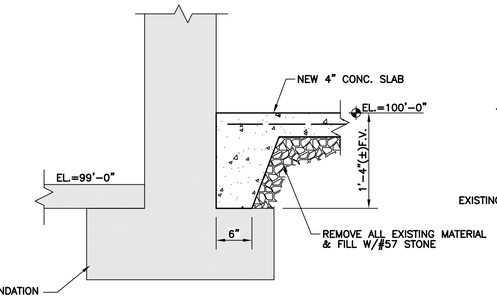

SECTION G S-3

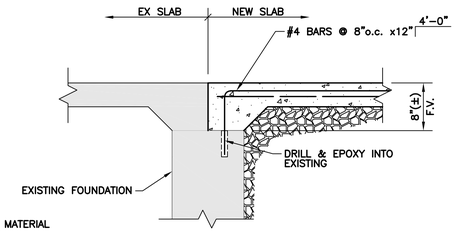

SECTION H S-3

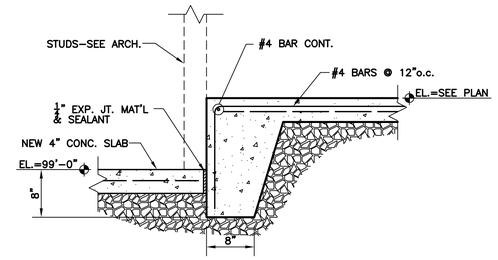

SECTION J S-3

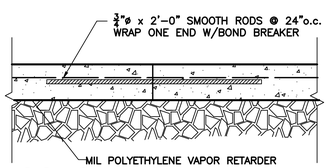

TYPICAL CONSTRUCTION JOINT DETAIL

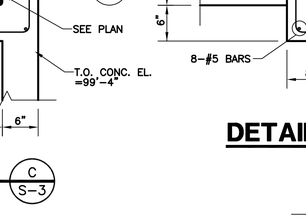

TYPICAL CORNER REINFORCING DETAIL

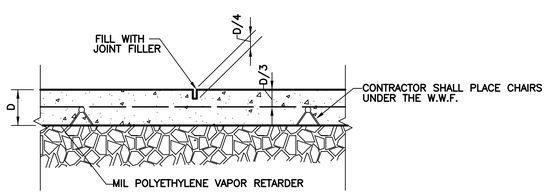

TYPICAL CONTROL JOINT DETAIL

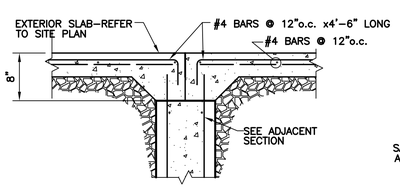

TYPICAL DOOR OPENING

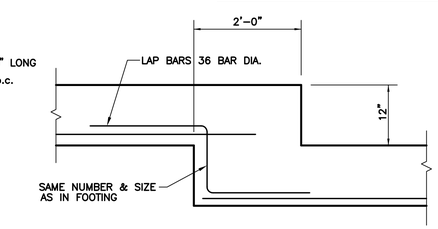

TYPICAL STEP FOOTING

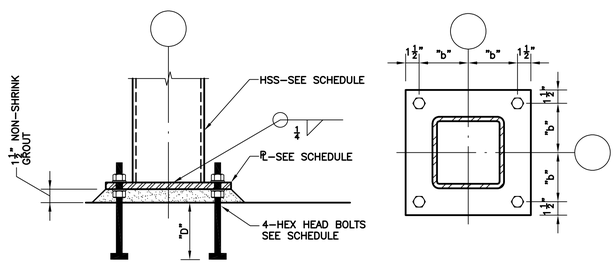

ELEVATION PLAN

TUBE STEEL COLUMN/BASE PL SCHEDULE				
COLUMN	PLATE SIZE	BOLT SPACING "B"	BOLT ø	EMBED DEPTH "D"
HSSS4x4	3/8x10x10"	3 1/2"	3/4"	9"
HSSS5x5	3/8x11x11"	4"	3/4"	9"
HSSS6x6	3/8x12x12"	4 1/2"	3/4"	9"

TYPICAL BASE PLATE DETAIL

POAGE ENGINEERS & ASSOCIATES
880 Sparta Court
Suite 200
Lexington, KY 40504
Phone: (859) 255-9034
Fax: (859) 252-3130

STATE OF KENTUCKY CHRISTOPHER S. KEY 37515 LICENSED PROFESSIONAL ENGINEER 11/8/2024

BUILDING ADDITION TO THE CORBIN CENTER
CORBIN, KENTUCKY

DATE	REVISION	BY

DESIGN DOCUMENTS:
The design shown on these plans and specifications is subject to review and all responsibility and liability for problems which arise from failure to follow these plans, specifications and the design intent they convey.

PROJECT NO.	4137-64
DESIGNED BY	CSK
DRAWN BY	SRF(c24167)
CHECKED BY	CSK
REVIEWED BY	
DATE	11-8-2024
SCALE	

MSE OF KENTUCKY, INC.
Engineers Architects Planners
624 Wellington Way
Lexington, KY 40503
www.msedev.com
Phone: (859)223-5694
Fax: (859)223-2607

DRAWING NO.
S-3
SHEET OF

POAGE/24167/11-8-24/SRF

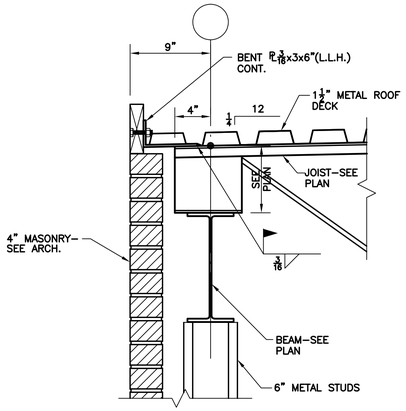

SECTION A S-4

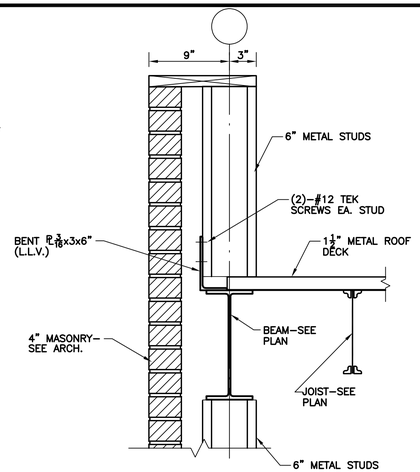

SECTION B S-4

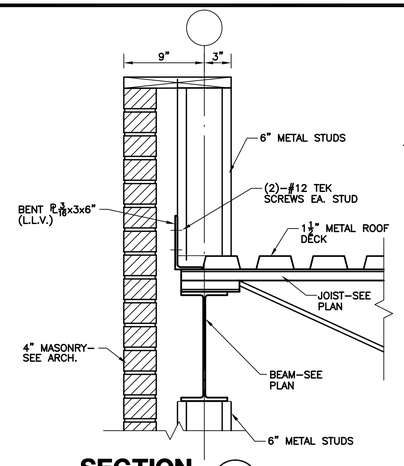

SECTION C S-4

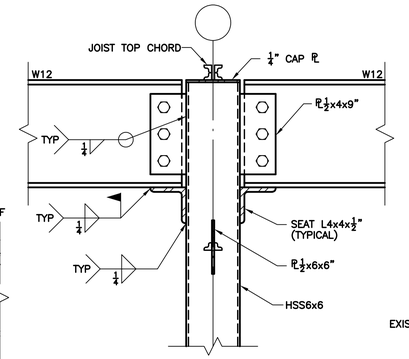

DETAIL D S-4

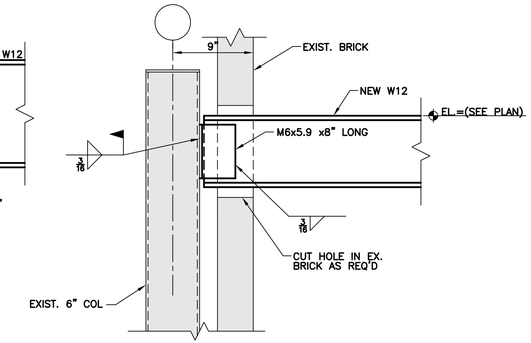

DETAIL E S-4

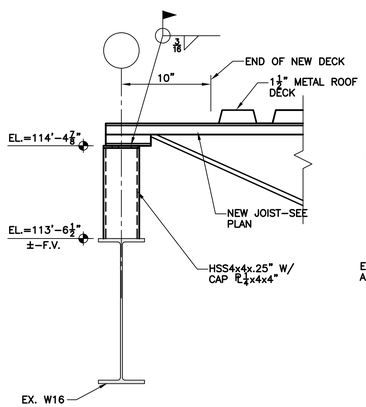

DETAIL F S-4

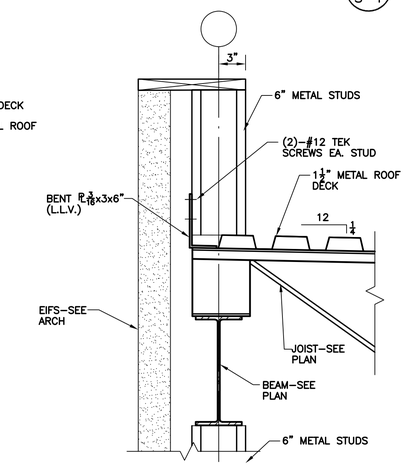

SECTION G S-4

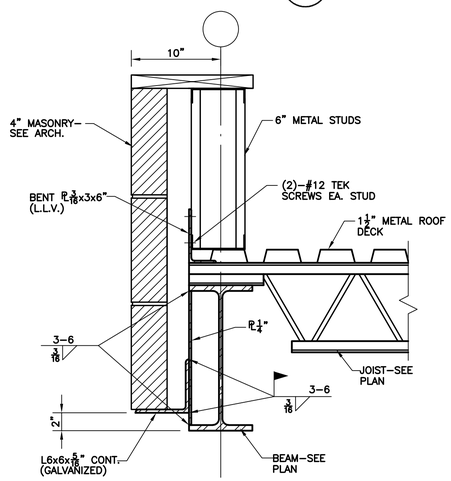

SECTION H S-4

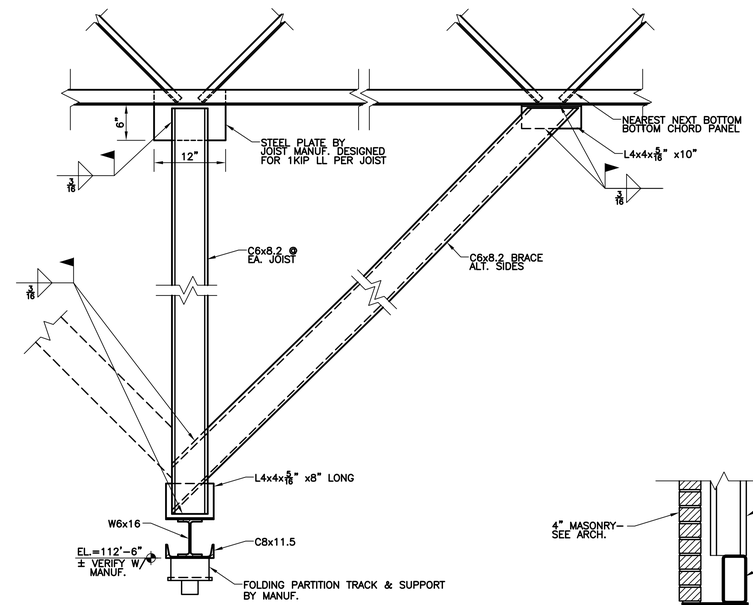

SECTION J S-4

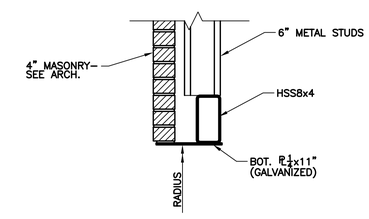

SECTION R S-4

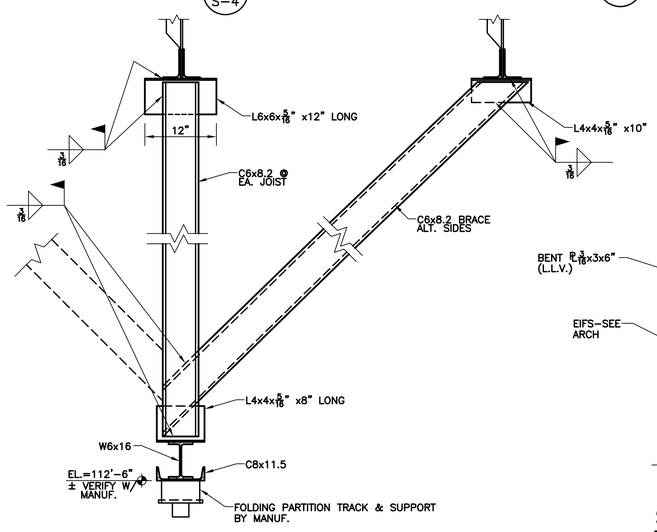

SECTION K S-4

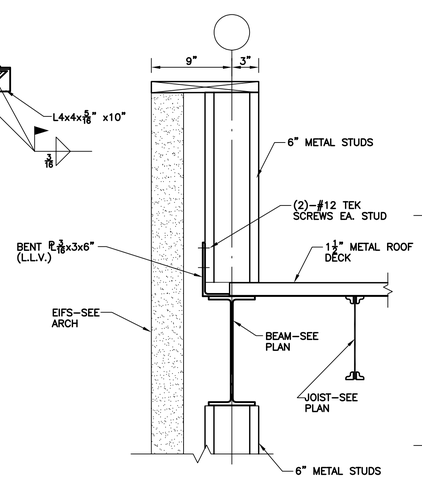

SECTION L S-4

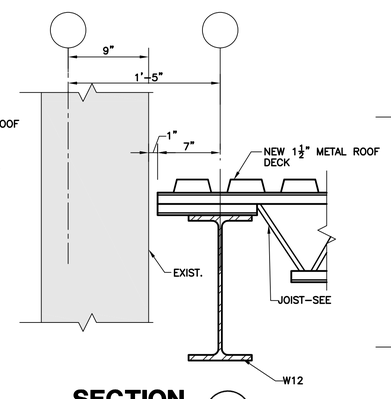

SECTION M S-4

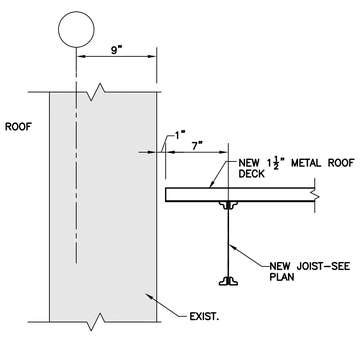

SECTION N S-4

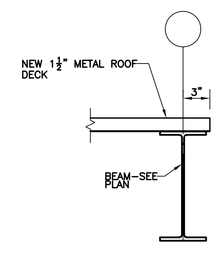

SECTION P S-4

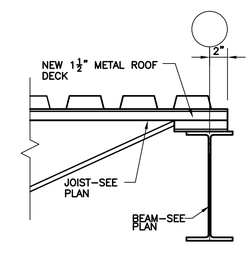

SECTION Q S-4

POAGE ENGINEERS & ASSOCIATES
880 Sparta Court
Suite 200
Lexington, KY 40504
Phone: (859) 255-9034
Fax: (859) 252-3130

STATE OF KENTUCKY CHRISTOPHER A. SLAY 37616 LICENSED PROFESSIONAL ENGINEER 11/8/2024

BUILDING ADDITION TO THE CORBIN CENTER
CORBIN, KENTUCKY

DATE	REVISION	BY

PROJECT NO.	4131-64
DESIGNED BY	CSK
DRAWN BY	SRF(24167)
CHECKED BY	CSK
REVIEWED BY	
DATE	11-8-2024
SCALE	

MSE OF KENTUCKY, INC.
Engineers
Architects
Planners
Phone: (859)223-5694
Fax: (859)223-2607
624 Wellington Way
Lexington, KY 40503
www.msekx.com

DRAWING NO.

S-4

SHEET OF

POAGE/24167/11-8-24/SRF

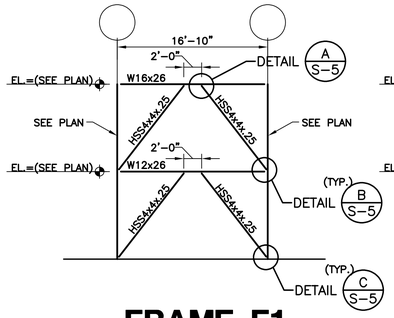

FRAME F1

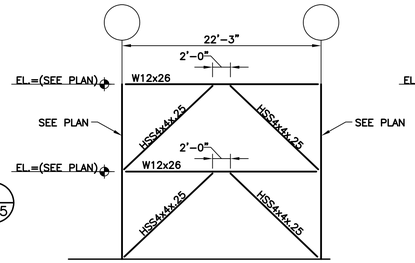

FRAME F2

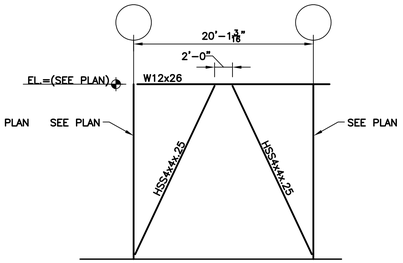

FRAME F3

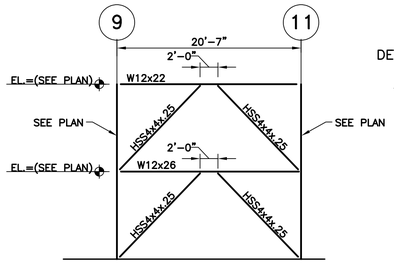

FRAME F4

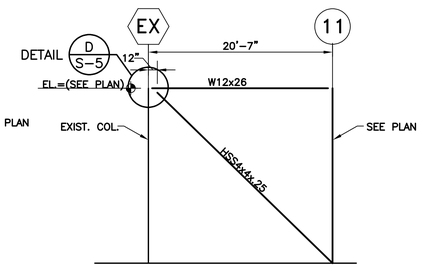

FRAME F5

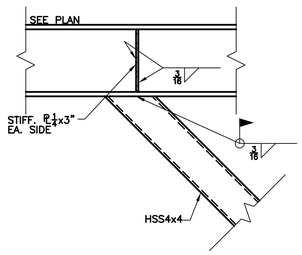

DETAIL A S-5

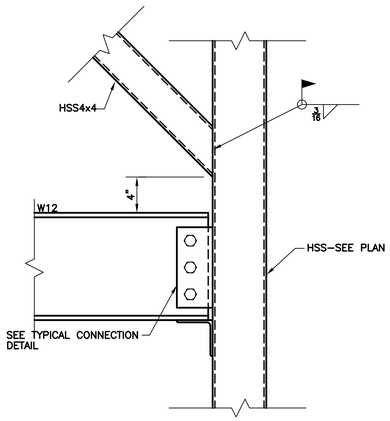

DETAIL B S-5

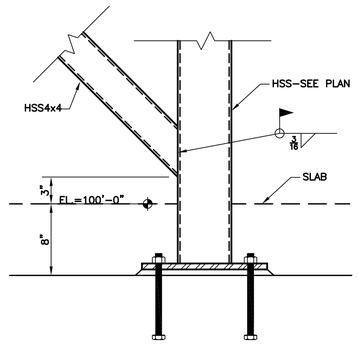

DETAIL C S-5

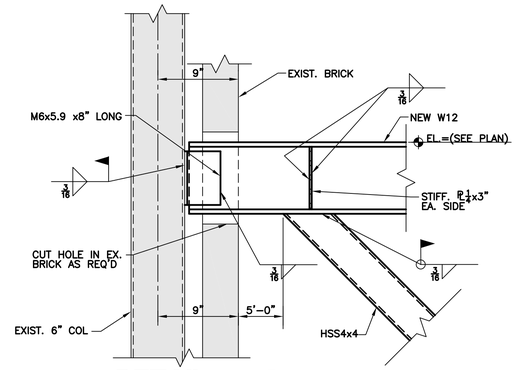

DETAIL D S-5

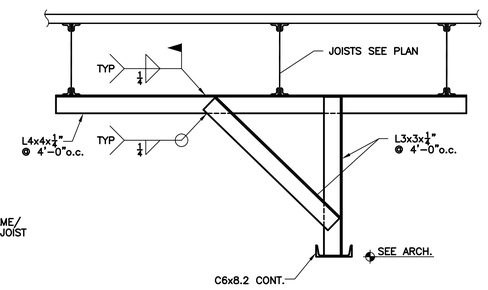

TYPICAL PARTITION SUPPORT DETAIL

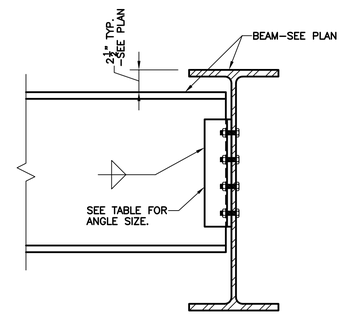

BEAM SIZE	ANGLE SIZE	ANGLE LENGTH	WELD SIZE	BOLTS
W8	2-L's3x3x1/4"	6"	3/16" FILLET	(4)-3/4"ø A325
W12	2-L's3x3x1/4"	9"	3/16" FILLET	(6)-3/4"ø A325
W16 & W18	2-L's3x3x3/8"	12"	1/4" FILLET	(8)-3/4"ø A325

TYPICAL BEAM TO BEAM CONNECTION

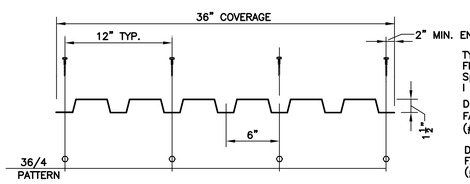

TYPE B
FINISH PTD. GRAY
GAGE 22
Sp .186 in.3 Sn .192 in.3
I .169 in.4 Fy min. 33 ksi

DECK/DECK (SIDELAP)
FASTEN @ 36"o.c. (MAX.)
(#12 x 3/4" TYPE NO. 3)

DECK/SUPPORT
FASTEN @ 12"o.c.
(#12 x 1 1/4" TYPE NO. 5)

TYPICAL ROOF DECK ATTACHMENT

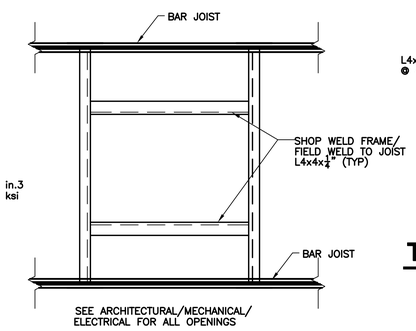

TYP. ROOF OPENING

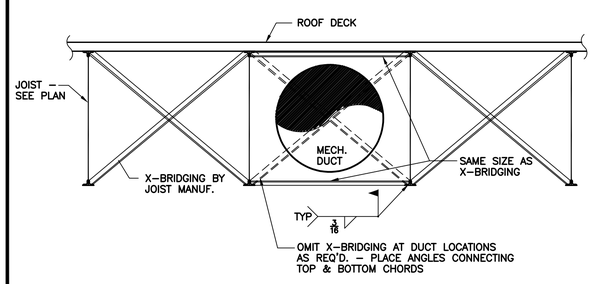

JOIST X-BRIDGING MODIFICATION @ MECH. DUCT LOCATIONS

NOTES: 1) FOR "d" LESS THAN 6"-NO REINFORCING IS REQUIRED
2) FOR "P" LESS THAN 100#-NO REINFORCING IS REQUIRED

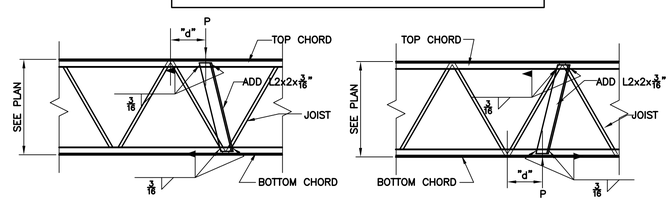

TOP CHORD CONCENTRATED LOAD

BOTTOM CHORD CONCENTRATED LOAD

REINFORCING REQUIRED AT ALL CONCENTRATED LOADS

BEAM	WELD	PLATE SIZE	SEAT ANGLE
W8/W10	1/4	1/2x4x6"	L4x4x1/2"
W12/W14	1/4	1/2x4x9"	L4x4x1/2"
W16	1/4	1/2x4x12"	L4x4x1/2"
W18	1/4	1/2x4x1'-3"	L4x4x1/2"

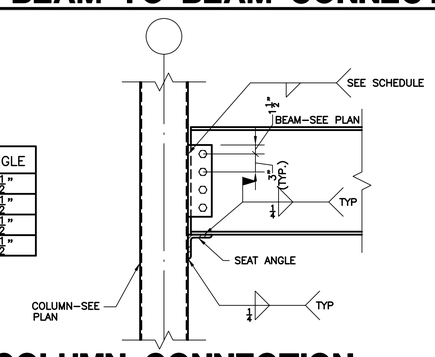

TYPICAL BEAM/COLUMN CONNECTION

(TYPICAL U.N.O.)

POAGE & ASSOCIATES ENGINEERS
880 Sparta Court
Suite 200
Lexington, KY 40504
Phone: (859) 255-9034
Fax: (859) 252-3130

STATE OF KENTUCKY CHRISTOPHER S. GRAY 37515 PROFESSIONAL ENGINEER 11/8/2024

BUILDING ADDITION TO THE CORBIN CENTER
CORBIN, KENTUCKY

DATE	REVISION	BY

DESIGN DOCUMENTS:
"Poage & Associates, Inc. makes no warranties and all responsibility and liability for problems which arise from failure to follow these plans, specifications and the design intent they convey."

COPYRIGHT ©
"Poage & Associates, Inc. has the subject material protected under copyright laws and all other applicable rights. Neither conveyance by MSE of Kentucky, Inc. nor any other party, shall be deemed to be a waiver of any part thereof, or to disclose any information contained therein to any other party, or to permit the reproduction of the document or any part thereof, or to reproduce the document or any part thereof, or to disclose any information contained therein to any other party, or to permit the reproduction of MSE of Kentucky, Inc."

PROJECT NO. 4131-64
DESIGNED BY CGK
DRAWN BY SRF(p24167)
CHECKED BY CGK
REVIEWED BY
DATE 11-8-2024
SCALE

MSE OF KENTUCKY, INC.
Engineers Architects Planners
624 Wellington Way
Lexington, KY 40503
www.mseinc.com
Phone: (859)223-5694
Fax: (859)223-2607

DRAWING NO.
S-5
SHEET OF

POAGE/24167/11-8-24/SRF

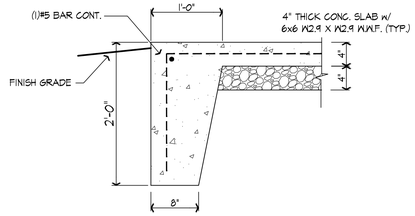

PORCH SLAB DETAIL (B / A-1)

SCALE: 1" = 1'-0"

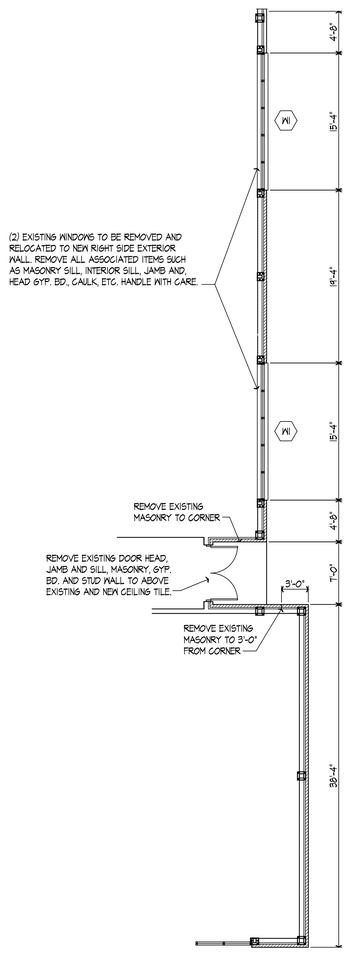

DEMO. PLAN

SCALE: 1/8"=1'-0"

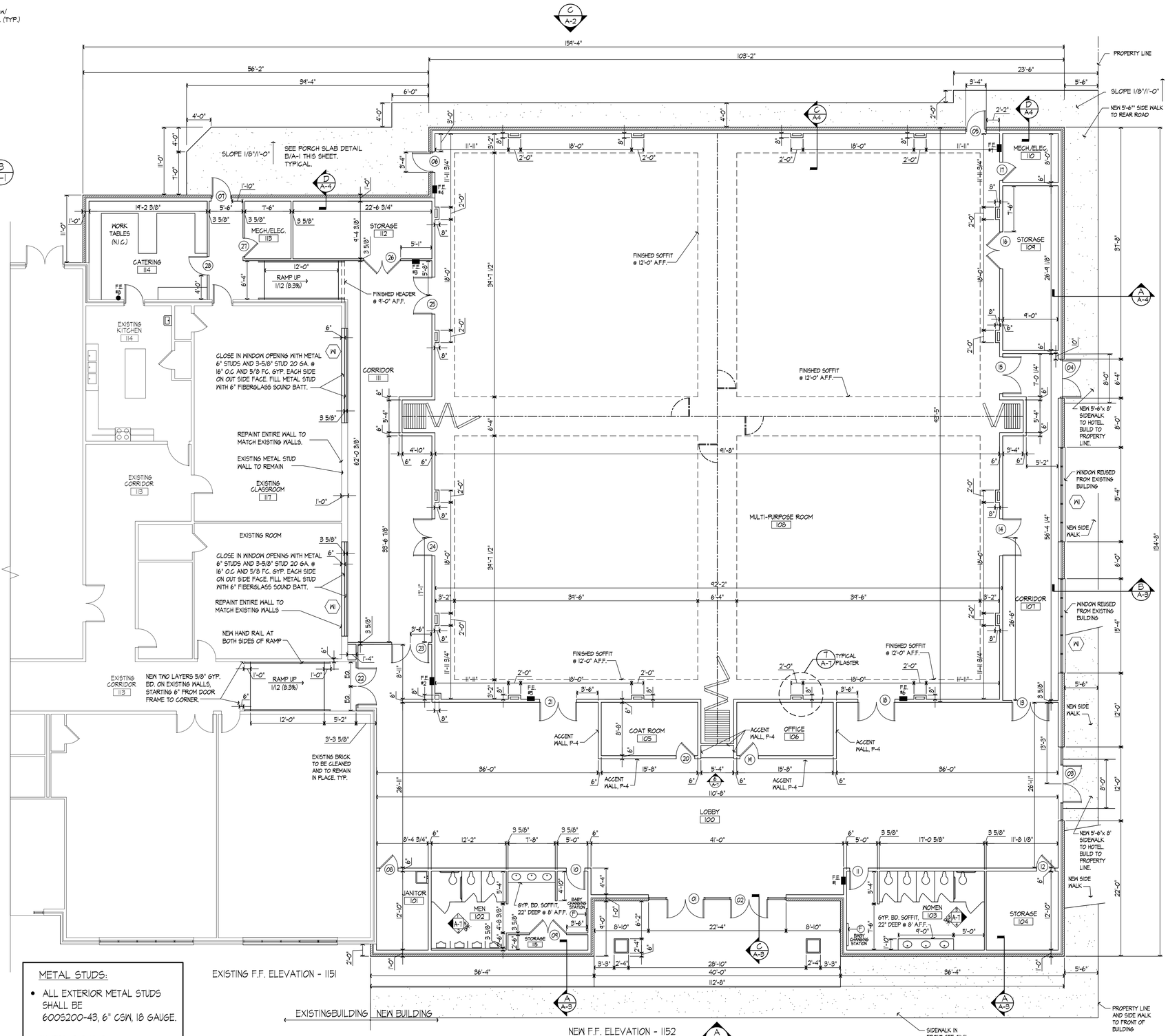

FLOOR PLAN (A / A-1)

SCALE: 1/8" = 1'-0"

ADDITION FLOOR PLAN (A / A-2)

15,805 S.F.

EXISTING BUILDING 20,500 S.F.

TOTAL AREA 36,305 S.F.

METAL STUDS:

- ALL EXTERIOR METAL STUDS SHALL BE 600S200-43, 6" CSW, 18 GAUGE.
- INTERIOR STUDS. SEE PLAN FOR MEMBER DEPTH, S137-33 MILS, CWN 20 GAUGE.

MARTIN S. FRIEDMAN REGISTERED NO 2791 COMMONWEALTH OF KENTUCKY ARCHITECT

3/31/25

BUILDING ADDITION TO THE CORBIN CENTER

CORBIN, KENTUCKY

DATE	REVISION	BY

PROJECT NO.	4137-64
DESIGNED BY	MSF/BLL
DRAWN BY	BLL
CHECKED BY	MSF
REVIEWED BY	
DATE	MARCH 2025
SCALE	AS NOTED

MSE OF KENTUCKY, INC.
Engineers
Architects
Planners
624 Wellington Way
Lexington, KY 40503
www.mseplus.com
Phone: (859)223-5694
Fax: (859)223-2607

DRAWING NO.

A-1

SHEET OF

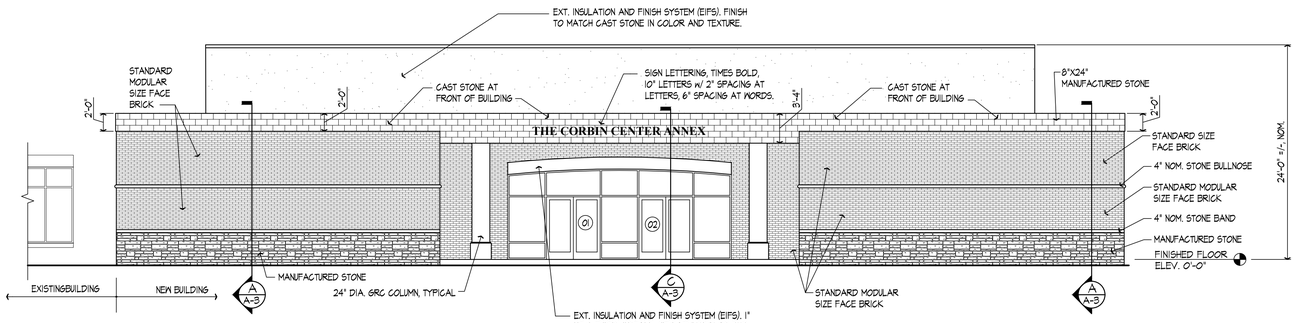

FRONT ELEVATION (A / A-2)
SCALE: 1/8" = 1'-0"

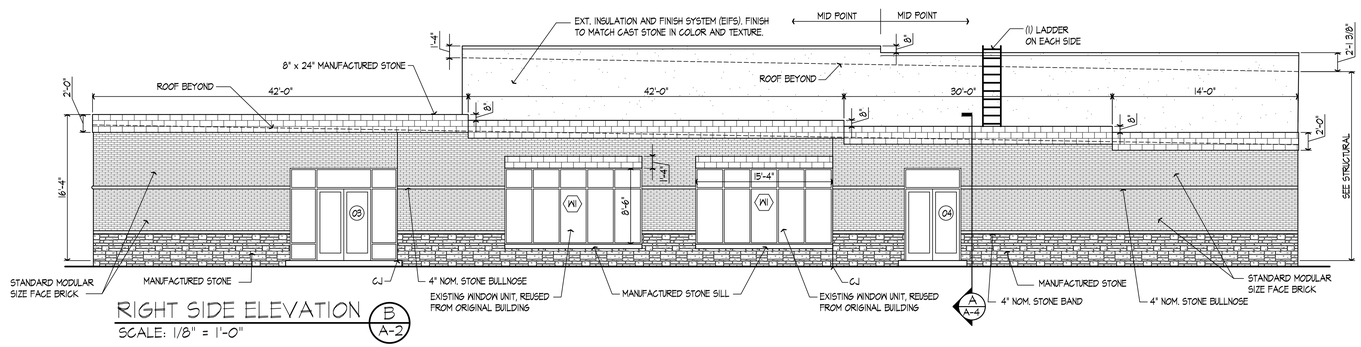

RIGHT SIDE ELEVATION (B / A-2)
SCALE: 1/8" = 1'-0"

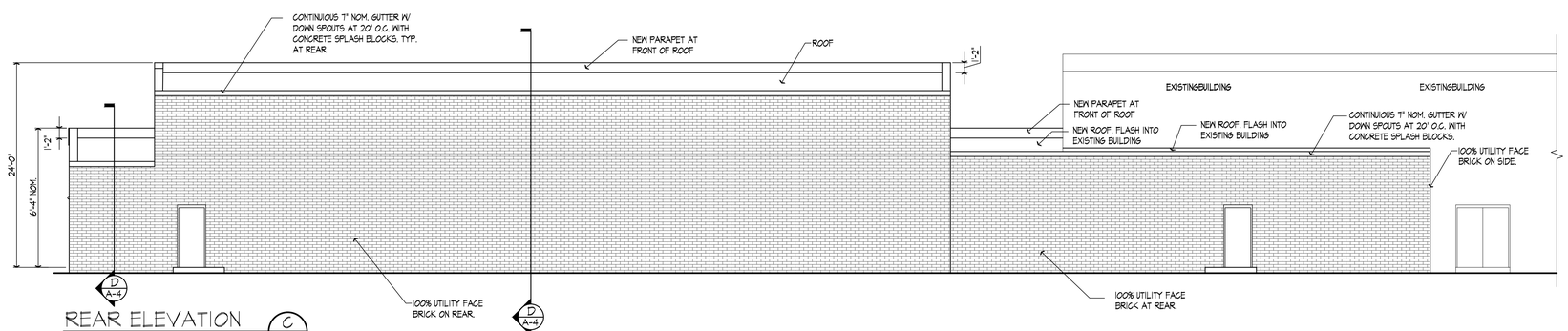

REAR ELEVATION (C / A-2)
SCALE: 1/8" = 1'-0"

EXTERIOR FINISHES:

- ALL GUTTERS, DOWNSPOUTS AND ALUMINUM EXTERIOR TRIM SHALL BE SELECTED FROM MANUFACTURER'S STANDARD COLORS.
- EXTERIOR INSULATION AND FINISH SYSTEM (EIFS) COLOR TO MATCH CAST STONE IN COLOR AND TEXTURE.
- STANDARD FACE BRICK SHALL BE BELDEN "CANYON VELOUR", MODULAR WITH Flamingo BRIXMENT MORTAR TO MATCH EXISTING AT FACE BRICK
- UTILITY FACE BRICK SHALL MATCH EXISTING CUNNINGHAM SMOOTH GRAY WITH Flamingo BRIXMENT MORTAR TO MATCH EXISTING
- GRC COLUMN COVERS TO BE PRIMED AND PAINTED TO MATCH EFIS COLOR AS SELECTED BY ARCHITECT
- ALL WINDOW AND DOOR GLAZING SHALL BE SOLEXIA GLASS WITH SOLARBAN 60 BY PPG, AS SPECIFIED ON WINDOW SCHEDULE
- ALL ALUMINUM WINDOWS AND DOOR FRAMES TO BE DARK BRONZE
- EXTERIOR HOLLOW METAL DOORS AND FRAMES PAINTED TO MATCH "DARK BRONZE" ALUMINUM DOORS. REFER TO FINISH SCHEDULE FOR INTERIOR SURFACE PAINT COLOR.
- MANUFACTURED STONE WAINSCOTING SHALL BE ARRISCRAFT CITADEL BUILDING STONE "TRADITIONAL GREY"
- MANUFACTURED CAST STONE SHALL BE ARRISCRAFT "RENAISSANCE" WHITE WITH MORTAR TO MATCH STONE.
  PARAPET: 8"x24"x4" NOM.
  WAINSCOT CAP: 4"x24"x4" NOM. (FLAT)
  ACCENT BAND: 4"x24"x6" NOM. (BULLNOSE)
  WINDOW HEADERS: 8"x24"x4" NOM.
  USE FLUSH SMOOTH HEAD JOINT AT HEADERS

MARTIN S. FRIEDMAN REGISTERED NO 2791 COMMONWEALTH OF KENTUCKY ARCHITECT
3/31/25

BUILDING ADDITION TO THE CORBIN CENTER
CORBIN, KENTUCKY

DATE	REVISION	BY

PROJECT NO.	4371-69
DESIGNED BY	MSF/BLL
DRAWN BY	BLL
CHECKED BY	MSF
REVIEWED BY	
DATE	NOVEMBER 2024
SCALE	AS NOTED

MSE OF KENTUCKY, INC.
Engineers Architects Planners
624 Wellington Way
Lexington, KY 40503
www.mseplex.com
Phone: (859)223-5694
Fax: (859)223-2607

DRAWING NO.
A-2
SHEET OF

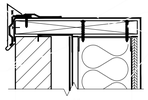

EXTERIOR DOOR JAMB DETAIL (D / A-3)

SCALE: 1-1/2" = 1' - 0"

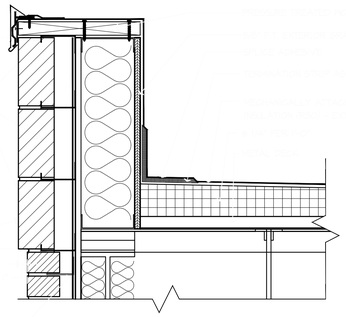

EXTERIOR DOOR JAMB DETAIL (E / A-3)

SCALE: 1-1/2" = 1' - 0"

UL DESIGN NO. 423 (NON BEARING WALL)
1 HR RATED WALL ASSEMBLY
MODIFIED FOR THIS PROJECT

HOTEL SIDE, 5.5' TO PROPERTY LINE WITH AN ADDITIONAL 20' WIDE PUBLIC UTILITY EASEMENT BETWEEN THE NEW CORBIN CENTER AND HOTEL.

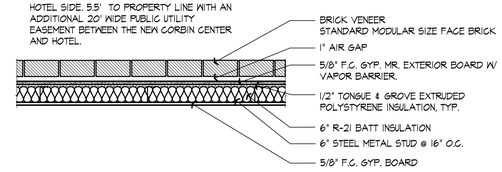

SIDE WALL ONE HOUR RATED (F / A-3)

SCALE: 3/4" = 1' - 0"

EXTERIOR WALL STUD NOTE:

6", 18 GA. CSM, C, STUD 2" FLANGE 5/8" RETURN @ 16" O.C. TYPICAL ALL EXTERIOR WALLS. EXCEPT AT MAIN FRONT DOOR, AT MAIN FRONT DOOR SAME STUD AT 12" O.C.

INTERIOR STUD NOTE:

ALL INTERIOR WALL 20 GA. METAL STUDS, SEE FLOOR PLAN FOR SPECIFIC SIZE.

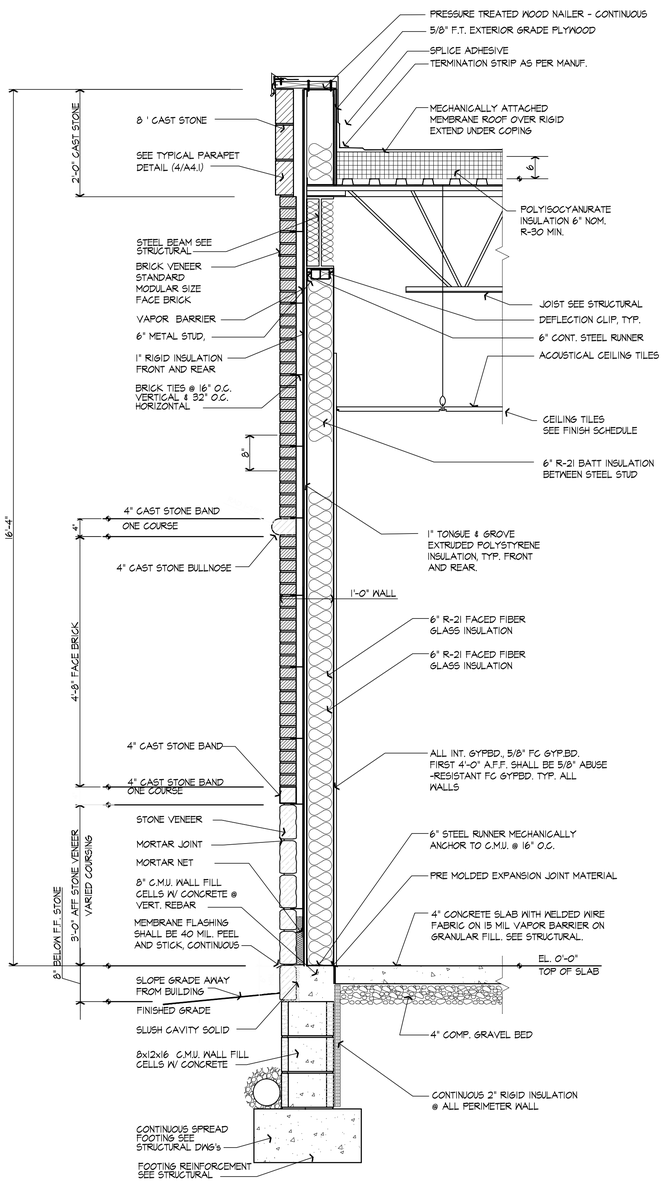

WALL SECTION, FRONT (A / A-3)

SCALE: 3/4" = 1' - 0"

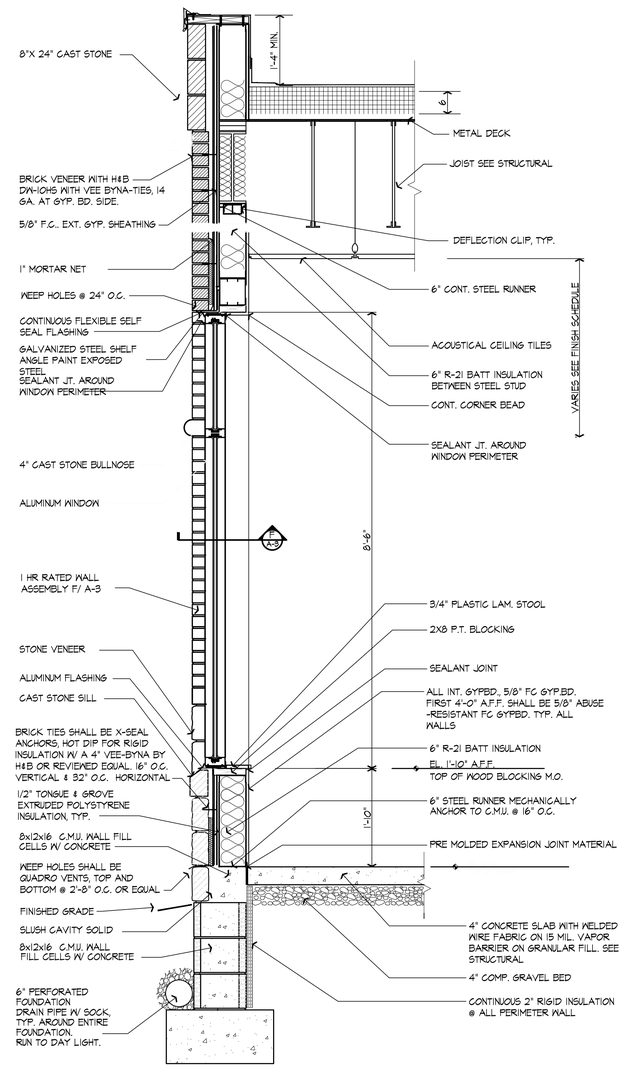

ONE HOUR RATED WALL AT HOTEL SIDE

WALL SECTION, SIDE WINDOW (B / A-3)

SCALE: 3/4" = 1' - 0"

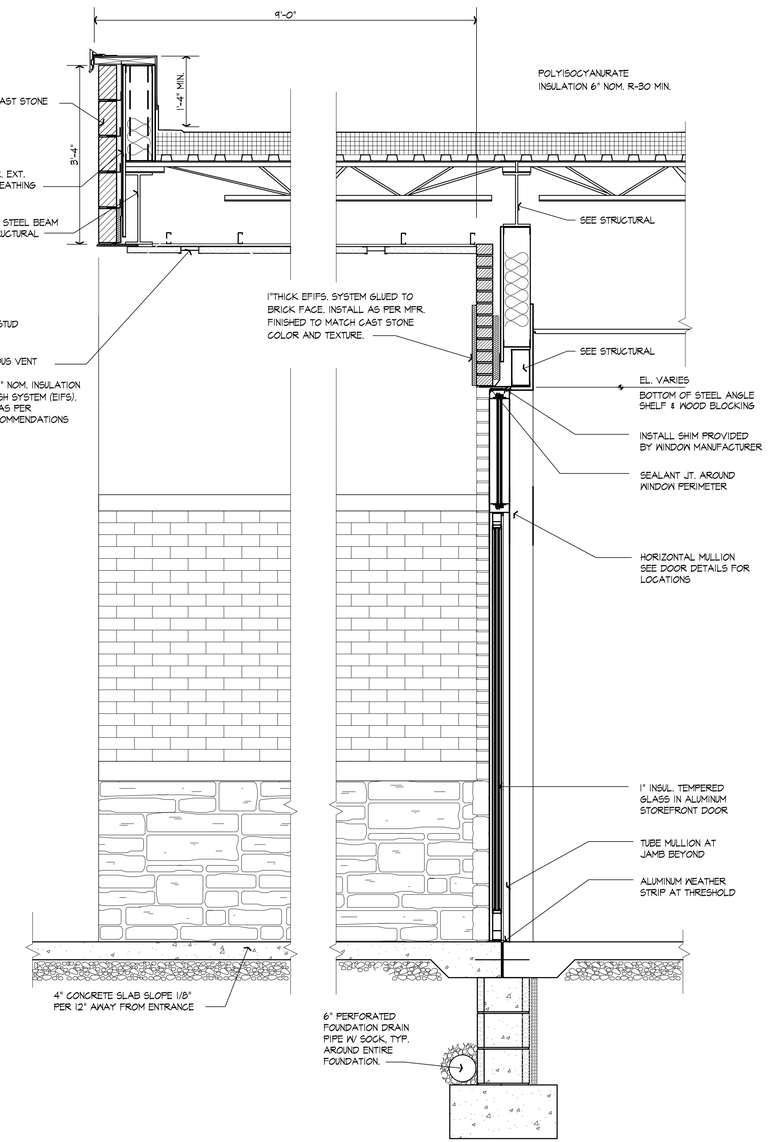

WALL SECTION, FRONT ENTRANCE (C / A-3)

SCALE: 3/4" = 1' - 0"

MARTIN S. FRIEDMAN
REGISTERED
NO. 2791
COMMONWEALTH OF KENTUCKY
ARCHITECT
3/31/25

BUILDING ADDITION TO
THE CORBIN CENTER
CORBIN, KENTUCKY

DATE	REVISION	BY

DESIGN DOCUMENTS
The contractor shall verify and be responsible for all dimensions. Do not scale the drawing. Any discrepancies shall be reported to the architect before proceeding with the work. Contractor shall be responsible to follow these plans, specifications and the design intent they convey.

PROJECT NO.	4137-69
DESIGNED BY	MSF
DRAWN BY	MSF
CHECKED BY	MSF
REVIEWED BY	
DATE	MARCH 2025
SCALE	AS NOTED

MSE OF KENTUCKY, INC.
Engineers Architects Planners
624 Wellington Way
Lexington, KY 40503
www.msedesi.com
Phone: (859)223-5694
Fax: (859)223-2607

DRAWING NO.
A-3
SHEET OF

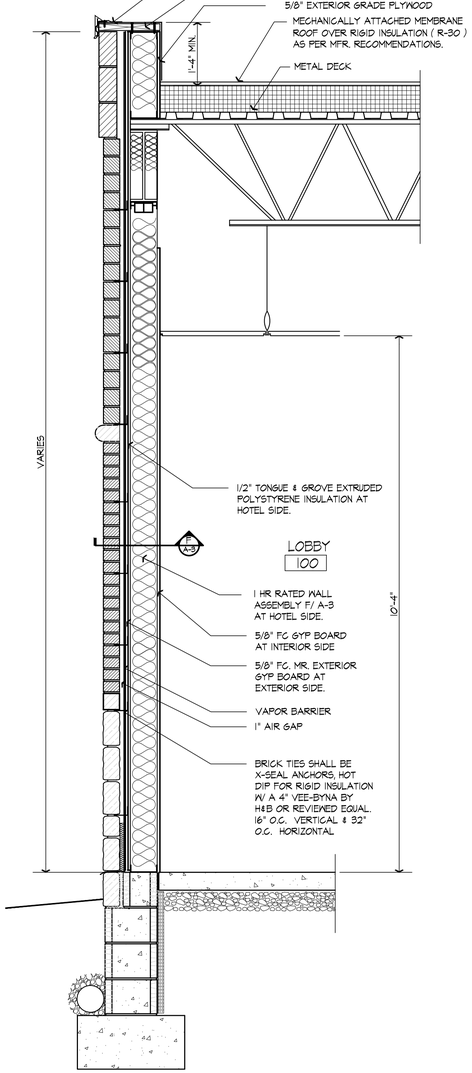

WALL SECTION, SIDE (A / A-4)

SCALE: 3/4" = 1' - 0"

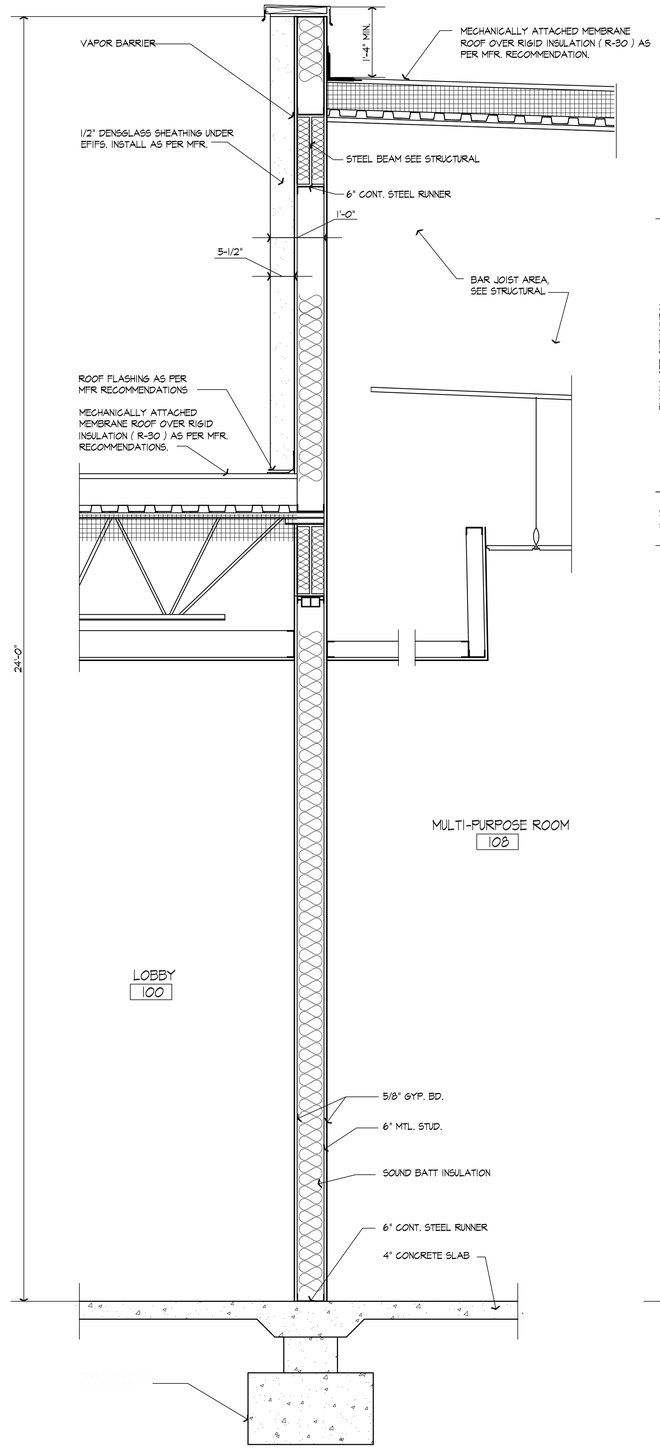

SIDE HIGH/LOW ROOF SIM.

WALL SECTION AT HIGH/LOW ROOF (B / A-4)

SCALE: 3/4" = 1' - 0"

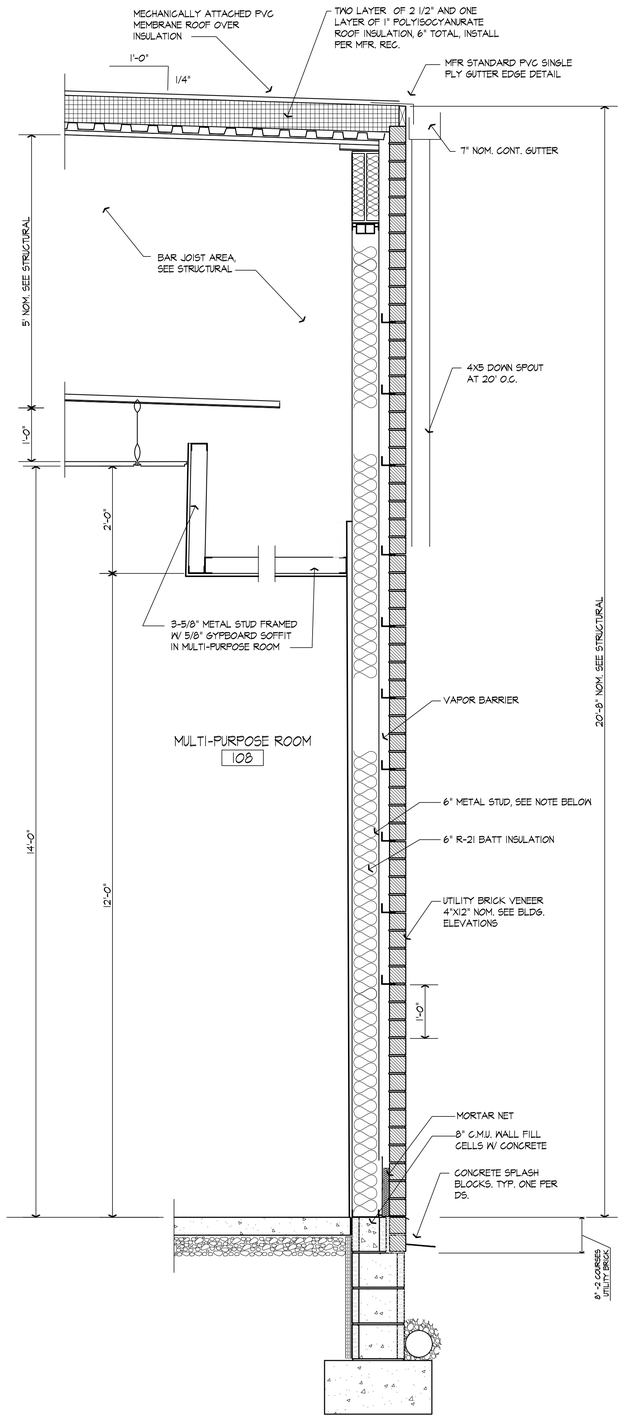

WALL SECTION REAR HIGH AREA (C / A-4)

SCALE: 3/4" = 1' - 0"

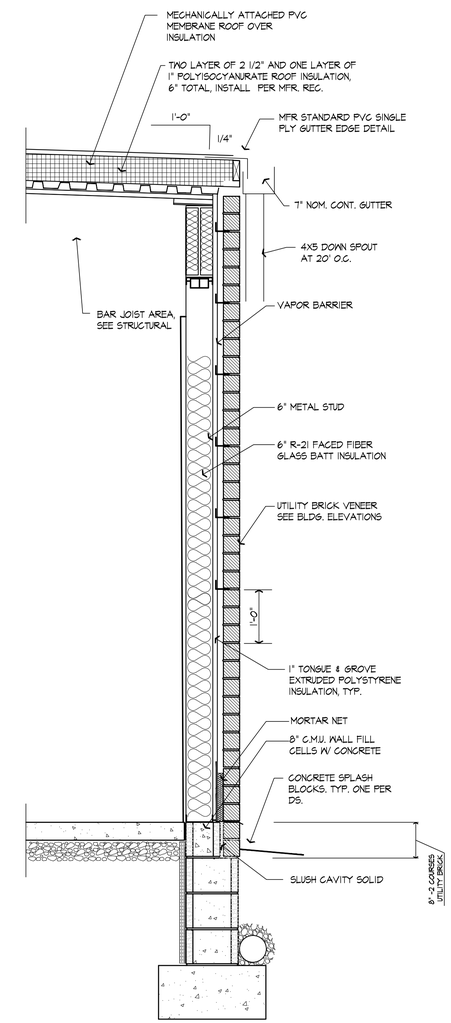

WALL SECTION REAR LOW AREA (D / A-4)

SCALE: 3/4" = 1' - 0"

MARTIN S. FRIEDMAN REGISTERED NO 2791 COMMONWEALTH OF KENTUCKY ARCHITECT

3/31/25

BUILDING ADDITION TO

THE CORBIN CENTER

CORBIN, KENTUCKY

DATE	REVISION	BY

DESIGN DOCUMENTS:
To the design professional, errors and omissions are and all responsibility and liability for problems which arise from failure to follow the design professional's specifications and/or drawings, rest with the owner.

PROJECT NO.	4137-69
DESIGNED BY	MSF
DRAWN BY	MSF
CHECKED BY	MSF
REVIEWED BY	
DATE	MARCH 2025
SCALE	AS NOTED

MSE OF KENTUCKY, INC.
Engineers Architects Planners
624 Wellington Way
Lexington, KY 40503
www.mseinc.com
Phone: (859)223-5694
Fax: (859)223-2607

DRAWING NO.

A-4

SHEET OF

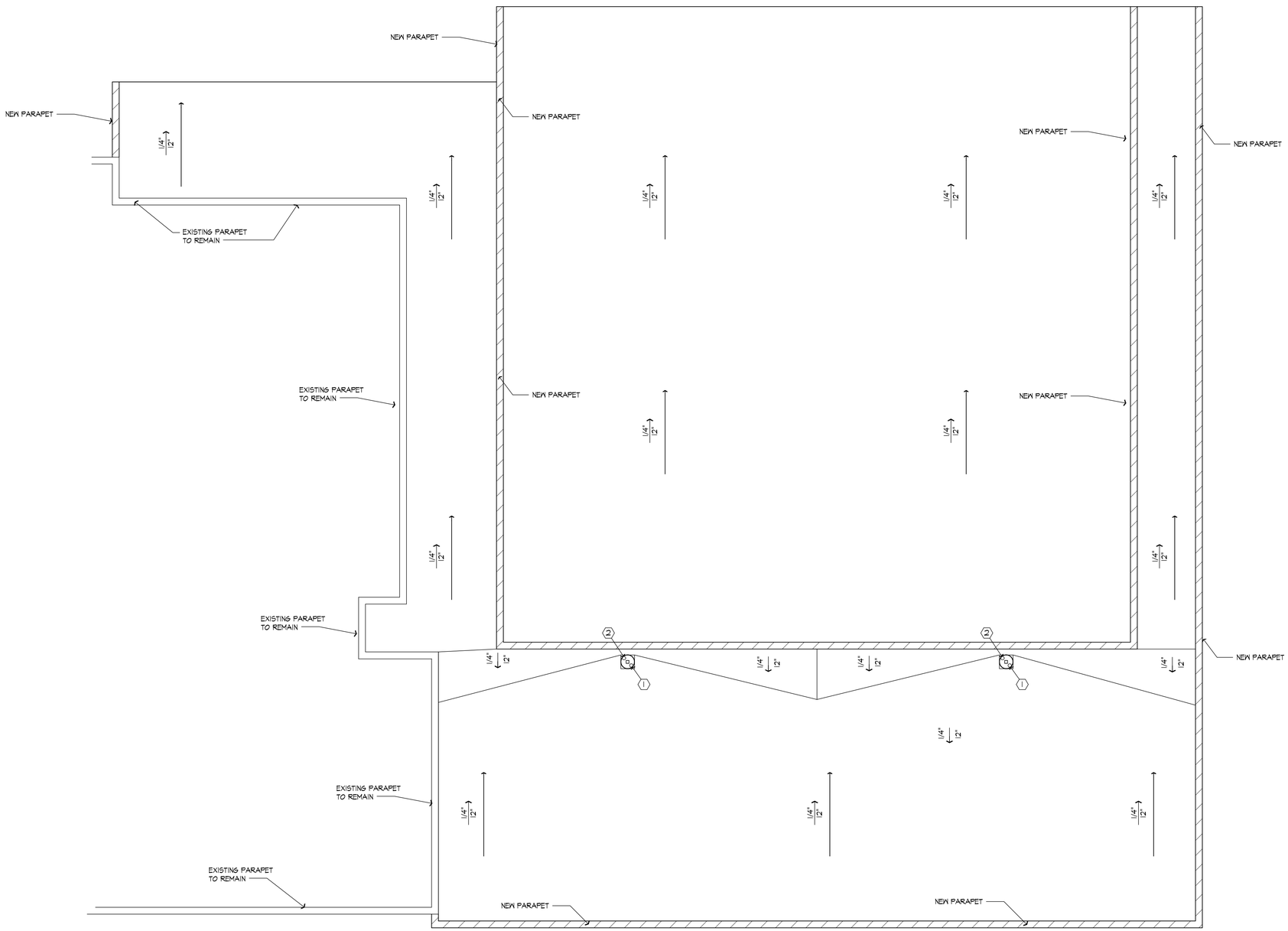

SHEET NOTES:

1. INSTALL 4" ROOF DRAIN.
2. INSTALL 4" OVERFLOW ROOF DRAIN.

ROOF PLAN (A / A-5)
SCALE: 1/8" = 1'-0"

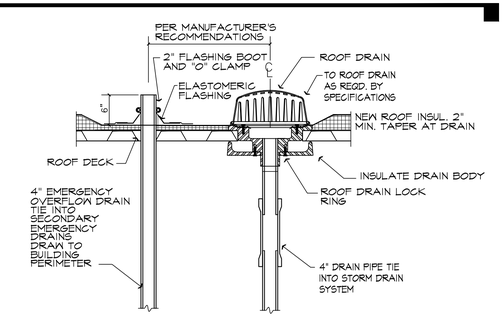

ROOF DRAIN (B / A-5)
SCALE: 1/8" = 1'-0"

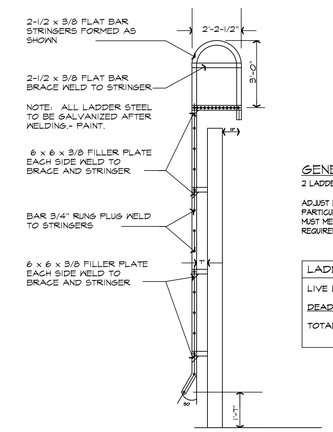

LADDER DETAIL (C / A-5)
SCALE: 1/2" = 1'-0"

GENERAL NOTE:
2 LADDERS REQUIRED.

ADJUST LADDERS AS NEEDED FOR EACH PARTICULAR SITUATION. ALL LADDERS MUST MEET STATE AND O.S.H.A. REQUIREMENTS.

LADDER DESIGN LOAD
LIVE LOAD 100 PSF
DEAD LOAD 50 PSF
TOTAL LOAD 150 PSF

MARTIN S. FRIEDMAN REGISTERED NO. 2791 COMMONWEALTH OF KENTUCKY ARCHITECT
3/31/25

BUILDING ADDITION TO
THE CORBIN CENTER
CORBIN, KENTUCKY

DATE	REVISION	BY

DESIGN DOCUMENTS
The Kentucky Professional Engineer waives any and all responsibility and liability for problems which arise from failure to follow these plans, specifications and the design intent they convey.

PROJECT NO.	4131-64
DESIGNED BY	MSF
DRAWN BY	MSF
CHECKED BY	MSF
REVIEWED BY	
DATE	NOVEMBER 2024
SCALE	AS NOTED

MSE OF KENTUCKY, INC.
Engineers
Architects
Planners
624 Wellington Way
Lexington, KY 40503
www.mselex.com
Phone: (859)223-5694
Fax: (859)223-2807

DRAWING NO.
A-5
SHEET OF

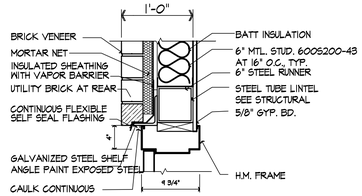

EXTERIOR DOOR HEAD @ REAR (A / A-6)

SCALE: 1" = 1' - 0"

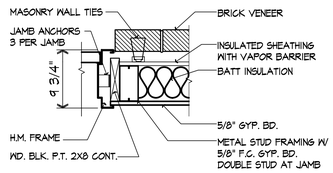

EXTERIOR DOOR JAMB @ REAR (B / A-6)

SCALE: 1" = 1' - 0"

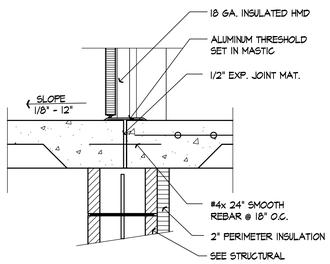

DOOR THRESHOLD. TYP. (C / A-6)

SCALE: 1" = 1' - 0"

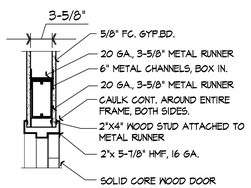

INTERIOR DOOR HEAD (D / A-6)

SCALE: 1" = 1' - 0"

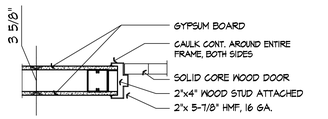

INTERIOR DOOR JAMB (E / A-6)

SCALE: 1" = 1' - 0"

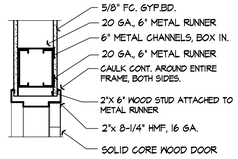

INTERIOR DOOR HEAD (F / A-6)

SCALE: 1" = 1' - 0"

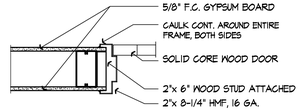

INTERIOR DOOR JAMB (G / A-6)

SCALE: 1" = 1' - 0"

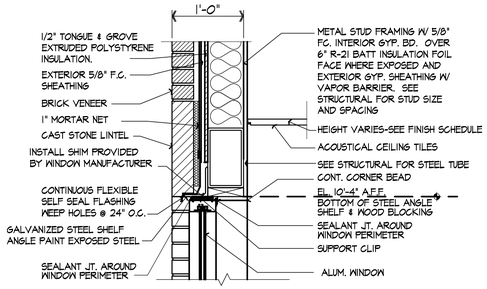

EXTERIOR WINDOW/DOOR HEAD (H / A-6)

SCALE: 1" = 1' - 0"

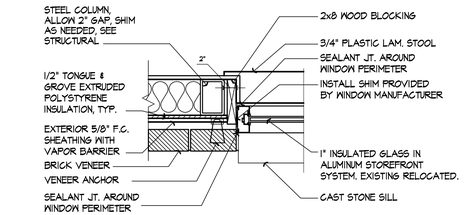

EXTERIOR DOOR/WINDOW JAMB (J / A-6)

SCALE: 1" = 1' - 0"

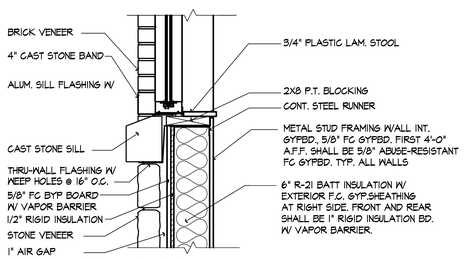

WINDOW SILL (K / A-6)

SCALE: 1" = 1' - 0"

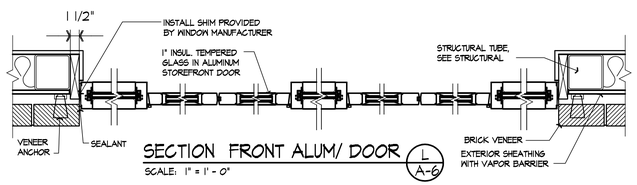

SECTION FRONT ALUM/ DOOR (L / A-6)

SCALE: 1" = 1' - 0"

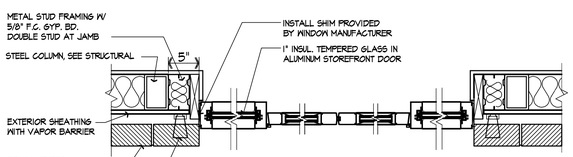

SECTION FRONT ALUM/ DOOR (M / A-6)

SCALE: 1" = 1' - 0"

DOOR SCHEDULE

DOOR NO.	TYPE	MATERIAL	WIDTH	HEIGHT	THICK.	FRAME TYPE	HEAD	JAMB	SILL	REMARKS
01	A	ALUM.	3'-0"	7'-0"	----	7	H	J	---	
02	A	ALUM.	3'-0"	7'-0"	----	7	H	J	---	
03	A	ALUM.	3'-0"	7'-0"	----	8	H	J	---	
04	A	ALUM.	3'-0"	7'-0"	----	9	H	J	---	
05	B	H.M., INS	3'-0"	7'-0"	1 3/4"	1	A	B	C	
06	B	H.M. INS	3'-0"	7'-0"	1 3/4"	1	A	B	C	
07	B	H.M. INS	3'-0"	7'-0"	1 3/4"	1	A	B	C	
08	C	SCW	3'-0"	7'-0"	1 3/4"	3	H	J	---	
09	C	SCW	PR. 3'-0"	7'-0"	1 3/4"	5	D	E	---	
10	C	SCW	3'-0"	7'-0"	1 3/4"	3	F	G	---	
11	C	SCW	3'-0"	7'-0"	1 3/4"	3	F	G	---	
12	C	SCW	3'-0"	7'-0"	1 3/4"	3	F	G	---	
13	D	SCW	PR. 3'-0"	7'-0"	1 3/4"	6	F	G	---	
14	C	SCW	PR. 3'-0"	7'-0"	1 3/4"	6	F	G	---	
15	C	SCW	PR. 3'-0"	7'-0"	1 3/4"	6	F	G	---	
16	C	SCW	PR. 3'-0"	7'-0"	1 3/4"	6	F	G	---	
17	C	SCW	3'-0"	7'-0"	1 3/4"	3	F	G	---	
18	C	SCW	PR. 3'-0"	7'-0"	1 3/4"	6	F	J	---	
19	C	SCW	3'-0"	7'-0"	1 3/4"	3	F	G	---	
20	C	SCW	3'-0"	7'-0"	1 3/4"	3	F	G	---	
21	C	SCW	PR. 3'-0"	7'-0"	1 3/4"	6	F	G	---	
22	D	SCW	PR. 3'-0"	7'-0"	1 3/4"	5	D	E	---	
23	D	SCW	PR. 3'-0"	7'-0"	1 3/4"	5	D	E	---	
24	C	SCW	PR. 3'-0"	4'-0"	1 3/4"	6	F	G	---	
25	C	SCW	PR. 3'-0"	7'-0"	1 3/4"	6	F	G	---	
26	C	SCW	PR. 3'-0"	7'-0"	1 3/4"	5	D	E	---	
27	C	SCW	3'-0"	7'-0"	1 3/4"	2	D	E	---	
28	E	SCW	3'-6"	7'-0"	1 3/4"	4	D	E	---	

SEE SPEC. SECTION 08710 FOR HARDWARE SETS

DOOR TYPES:

SCALE 1/4"" = 1' - 0"

*ALL DOORS GLAZED BY CODE.

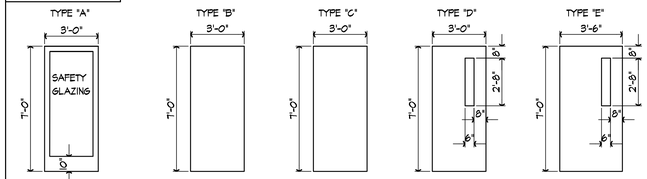

ALUMINUM MEDIUM STILE SWING ENTRANCE DOOR, YKK AP SERIES 35D INSULATED 1" GLASS. FINISH YB5N DARK BRONZE

EXTERIOR HOLLOW METAL INSULATED DOOR, 18 GA.

INTERIOR SOLID CORE WOOD DOOR, 1-3/4" FLUSH

INTERIOR SOLID CORE FLUSH WOOD DOOR 1-3/4" w/1/4" TEMPERED GLAZING

INTERIOR SOLID CORE FLUSH WOOD DOOR 1-3/4" w/1/4" TEMPERED GLAZING

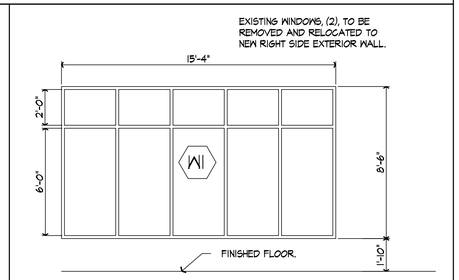

FRAME TYPES:

SCALE 1/4"" = 1' - 0"

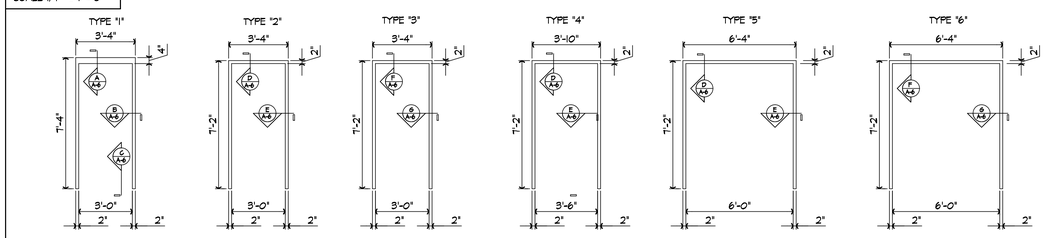

EXTERIOR HOLLOW METAL FRAME, 16 GA., 9-3/4" WIDE, WELDED

INTERIOR HOLLOW METAL FRAME, 16 GA., 5-7/8" WIDE, DW. FRAME

INTERIOR HOLLOW METAL FRAME, 16 GA., 8-3/4" WIDE, WELDED

INTERIOR HOLLOW METAL FRAME, 16 GA., 5-7/8" WIDE, DW. FRAME

INTERIOR HOLLOW METAL FRAME, 16 GA., 5-7/8" WIDE, DW FRAME

INTERIOR HOLLOW METAL FRAME, 16 GA., 8-1/4" WIDE, WELDED

STORE FRONTS

SCALE 1/4"" = 1' - 0"

*ALUMINUM STOREFRONTS/DOORS GLAZED BY CODE, TYPICAL

ALL EXTERIOR GLASS SHALL BE SOLEXIA GLASS WITH AIR SPACE, SOLARBAN 60 (3) ON CLEAR GLASS FOR A 1" UNIT BY PPG. OR EQUAL. ALUM EXTERIOR DOORS WILL BE INSULATED SOLEXIA GLASS.

ALUMINUM STOREFRONT, YKK MODEL YES 45TU 2" x 4-1/2" CENTER GLAZED DARK BRONZE WITH SOLEXIA GLASS

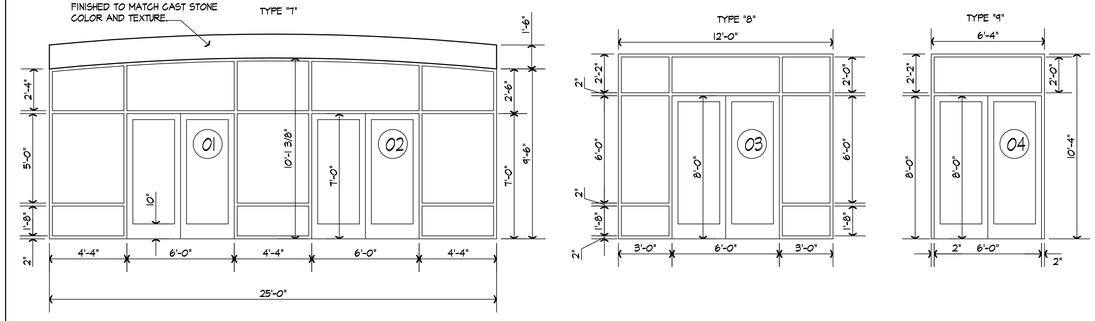

MARTIN S. FRIEDMAN REGISTERED NO 2791 COMMONWEALTH OF KENTUCKY ARCHITECT

3/31/25

BUILDING ADDITION TO THE CORBIN CENTER

CORBIN, KENTUCKY

DATE	REVISION	BY

PROJECT NO.	4137-69
DESIGNED BY	MSF
DRAWN BY	MSF
CHECKED BY	MSF
REVIEWED BY	MSF
DATE	NOVEMBER 2024
SCALE	AS NOTED

Moyes, Stephenson & Elderedge, Inc.
Architecture Interiors Planning
Phone: (859)223-5694
Fax: (859)223-2607
624 Wellington Way
Lexington, KY 40503
www.mseaoc.com

DRAWING NO.

A-6

SHEET OF

INTERIOR ELEVATIONS

3/8" = 1'-0"

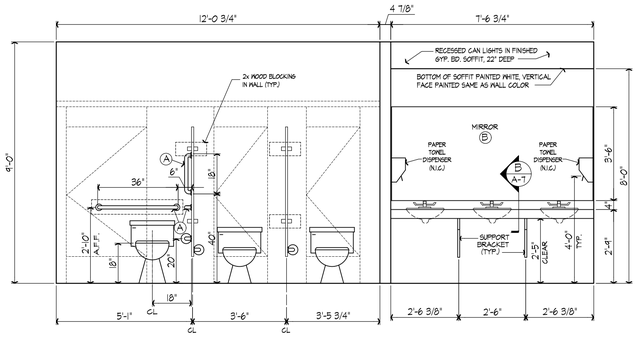

1 MEN (102)

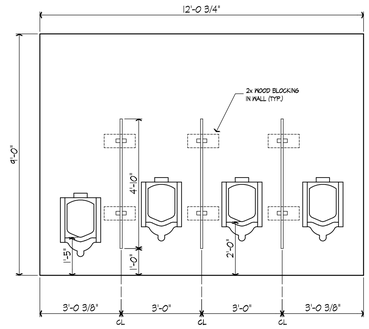

2 MEN (102)

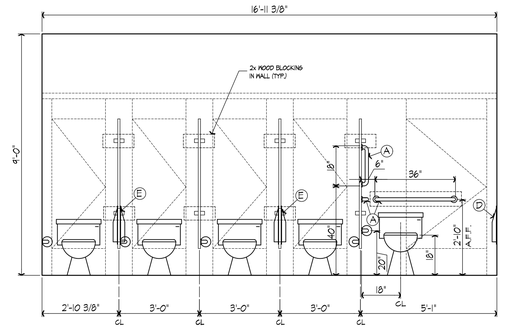

3 WOMEN (103)

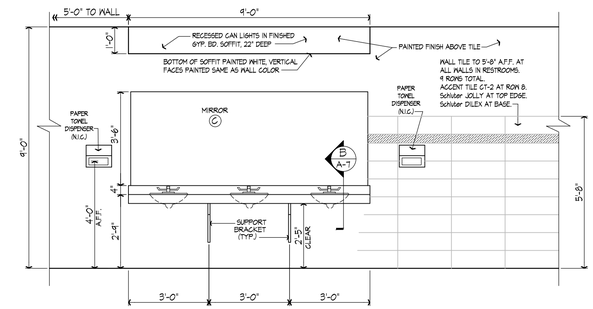

4 WOMEN (103)

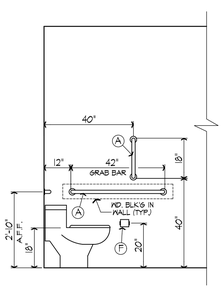

5 TYPICAL SIDE VIEW (for ADA toilet & accessories)

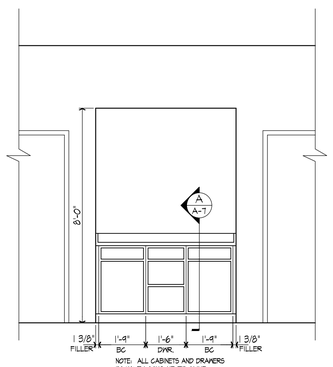

6 LOBBY (100)

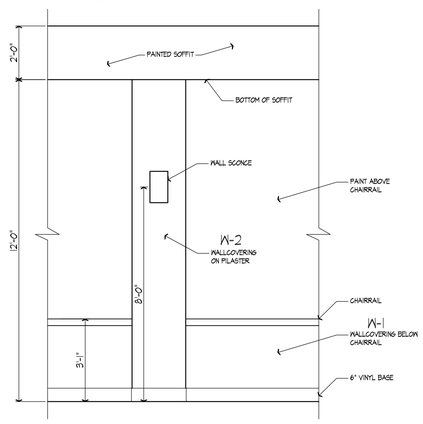

7 MULTI-PURPOSE ROOM (108)

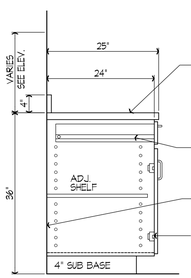

TYP. LAMINATE CABINETS (A / A-7)

SCALE: 3/4"=1'-0"

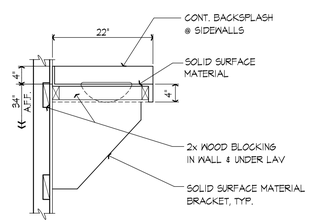

LAVATORY SECTION (B / A-7)

SCALE: 3/4"=1'-0"

FINISH SCHEDULE

ROOM #	ROOM NAME	FLOOR: CARPET TILE	FLOOR: SHEET VINYL	FLOOR: PORCELAIN TILE	FLOOR:	FLOOR: SEALED CONCRETE	BASE: VINYL WALL BASE	BASE: COVE TRANSITION	WALLS & TRIM: LATEX EGGSHELL WALL PAINT	WALLS & TRIM: LATEX SEMI-GLOSS WALL PAINT	WALLS & TRIM: SPECIALTY PAINT	WALLS & TRIM: VINYL WALLCOVERING	WALLS & TRIM: CERAMIC TILE	WALLS & TRIM: VINYL CHAIR RAIL	MISC.: COUNTERTOP	MISC.: CABINETRY	CLG.: PAINTED GYPSUM BOARD SOFFIT	CLG.: 2' X 2' ACOUSTICAL CEILING TILE	CLG.:	CLG. HT.
100	LOBBY	C-1 H					B-2				P-3				SS-1	L-1		A-1		10'-4"
101	JANITOR					CON-1	B-1			P-7								A-2		9'-0"
102	MEN			PT-1				B-3		P-5			CT-1 K CT-2		SS-1		P-2 M	A-2		9'-0"
103	WOMEN			PT-1				B-3		P-6			CT-1 K CT-2		SS-1		P-2 M	A-2		9'-0"
104	STORAGE					CON-1	B-1			P-7								A-2		9'-0"
105	COAT ROOM	C-2					B-1			P-7								A-2		9'-0"
106	OFFICE	C-2					B-1			P-7								A-2		9'-0"
107	CORRIDOR	C-3 H C-4					B-1				P-3							A-1		10'-4"
108	MULTI-PURPOSE ROOM	C-3 H C-4					B-2			P-7 E		W-1 G W-2 D		VC-1			P-2 M	A-1		12'-0"/14'-0"
109	STORAGE					CON-1	B-1			P-7								A-2		9'-0"
110	MECHANICAL/ELECTRICAL					CON-1	B-1			P-7								A-2		9'-0"
111	CORRIDOR	C-3 H C-4					B-1				P-3							A-1		9'-0"
112	STORAGE					CON-1	B-1			P-7								A-2		9'-0"
113	MECHANICAL/ELECTRICAL					CON-1	B-1			P-7								A-2		9'-0"
114	CATERING					CON-2	B-1				P-7							A-2		9'-0"
115	STORAGE					CON-1	B-1			P-7				M-1				A-2		9'-0"
	EXISTING KITCHEN (114)					CON-2 G	B-1													
	EXISTING CORRIDOR (113)	C-1 J					B-1													

FINISH SPECIFICATIONS

FLOORS:

C-1 Interface Flooring (walk off carpet)
"Step Repeat - SR444", Color 104442 Smoke
50 cm x 50 cm modular, ashlar installation

C-2 Interface Flooring (Lobby/corridor field)
"Dot 2 Dot - 13130", Color 108071 Pebble
25 cm x 1 m modular planks, ashlar installation

C-3 Interface Flooring (MP Room field)
"Dot 0-Mine - 13131", Color 108087 Pebble
25 cm x 1 m modular planks, ashlar installation

C-4 Interface Flooring (MP Room/corridor border)
"Dadley Dot - 13132", Color 108103 Pebble
25 cm x 1 m modular planks, ashlar installation

C-5 Interface Flooring (Lobby Accent)
"N6100 - 13127", Color 108094 Caribbean
50 cm x 50 cm modular

C-6 Interface Flooring (Lobby Accent)
"N6200 - 13128", Color 107667 Greige/Clay
50 cm x 50 cm modular

C-7 Interface Flooring (Lobby Accent)
"N6200 - 13128", Color 107668 Greige/Caribbean
50 cm x 50 cm modular

PT-1 Daltile
"Modernist" Prouve Steel M088
24" x 24", standard grid pattern

CON-1 Sealed Concrete
Prosoco "Consolideck LS/CS"

CON-2 Polished Concrete
Level 2 - Honed
Class B - Fine Aggregate (Salt & Pepper)
with Prosoco Lithium Silicate Hardener/Densifier and Consolideck LS6Guard burnished-in sealer

BASE:

B-1 Johnsonite Vinyl Wall Base
4" cove base, Color - 63 Burnt Umber

B-2 Johnsonite "Millwork" Contoured Wall Base
"Recessed 6", MW-63-X63, color 63 Burnt Umber

B-3 Schluter-Systems
Schluter-DILEX-AHKA cove, clear anodized aluminum
(used only where walls have tile wainscoting)

WALLS:

P-1 Benjamin Moore #2128-10 Black Beauty

P-2 Ceiling White

P-3 (lobby walls) Scuffmaster to match Polomyx PL-008436

P-4 Benjamin Moore #1113 Polished Slate

P-5 Benjamin Moore #641 Dartsmouth Green

P-6 Benjamin Moore #1414 Mexican Tile

P-7 Benjamin Moore #1472 Alaskan Skies

W-1 MDC Interior Solutions - commercial vinyl wallcovering
Thom Filicia Contract "Cardiff" TFC6612 Lake
Type II, 52" wide, osnaburg backing

W-2 MDC Interior Solutions - commercial vinyl wallcovering
Esquire Collection "Kyrie" MKY1004 Teak
Type II, 52/54" wide, osnaburg backing

CT-1 Daltile
"Linear" Matte Chalkboard 0180, 8" x 24" wall tile

CT-2 Daltile
"Linear" Chalkboard 0180, 4" x 8" accent wall tile

VC-1 Johnsonite "Millwork" Contoured Chair Rail
"Rampart" CHR-31-C, color TA3 Castanay CB, 4" x 3/8"

PLASTIC LAMINATES / SOLID SURFACE:

L-1 Wilsonart #17002K-57 Fisher Oak

SS-1 Wilsonart solid surface, Paris Fog 9110CS

CEILING:

A-1 Armstrong "Optima", #3251
24"x 24"x 1", square tegular edge
with Silhouette XL 9/16" Bolt-Slot, 1/8" Reveal

A-2 Armstrong "Fine Fissured"
#1728, 24"x 24"x 5/8", Square Lay-in,
White (WH) with White grid.

NOTES:

A) All interior metal door frames to be painted with finish P-1.
B) All interior wood doors to be plain-sliced oak with clear factory finish, matching existing doors.
C) Wallcovering BELOW chair rail, finish W-1.
D) Accent wallcovering W-2 full height at pilasters in Multi-purpose Room.
E) Painted finish ABOVE chair rail.
F) Plastic Laminate window stools to be finish L-1 throughout.
G) Existing glue-down linoleum tiles to be removed before grinding concrete floor.
H) Multiple carpet styles used in this area. See carpet pattern details on A-8.
J) Modular carpet at new ramp in Existing Corridor. Vinyl transition strip at top and bottom.
K) Ceramic tile wainscoting at all restroom walls. No tile required behind mirrors. See tile pattern on interior elevation 4/A-7.
M) Bottom of soffit painted P-2 ceiling white at all locations. Vertical faces of soffits in Men 102 and Women 103 painted same color as walls. Vertical faces in Multi-Purpose Room 108 painted P-2 ceiling white.

MARTIN S. FRIEDMAN REGISTERED NO 2791 COMMONWEALTH OF KENTUCKY ARCHITECT

3/31/25

BUILDING ADDITION TO
THE CORBIN CENTER
CORBIN, KENTUCKY

DATE	REVISION	BY

PROJECT NO.	4137-64
DESIGNED BY	MSF/BLL
DRAWN BY	BLL
CHECKED BY	MSF
REVIEWED BY	
DATE	NOVEMBER 2024
SCALE	AS NOTED

MSE OF KENTUCKY, INC.
Engineers Architects Planners
624 Wellington Way
Lexington, KY 40503
www.mseplex.com
Phone: (859)223-5684
Fax: (859)223-2607

DRAWING NO.

A-7

SHEET OF

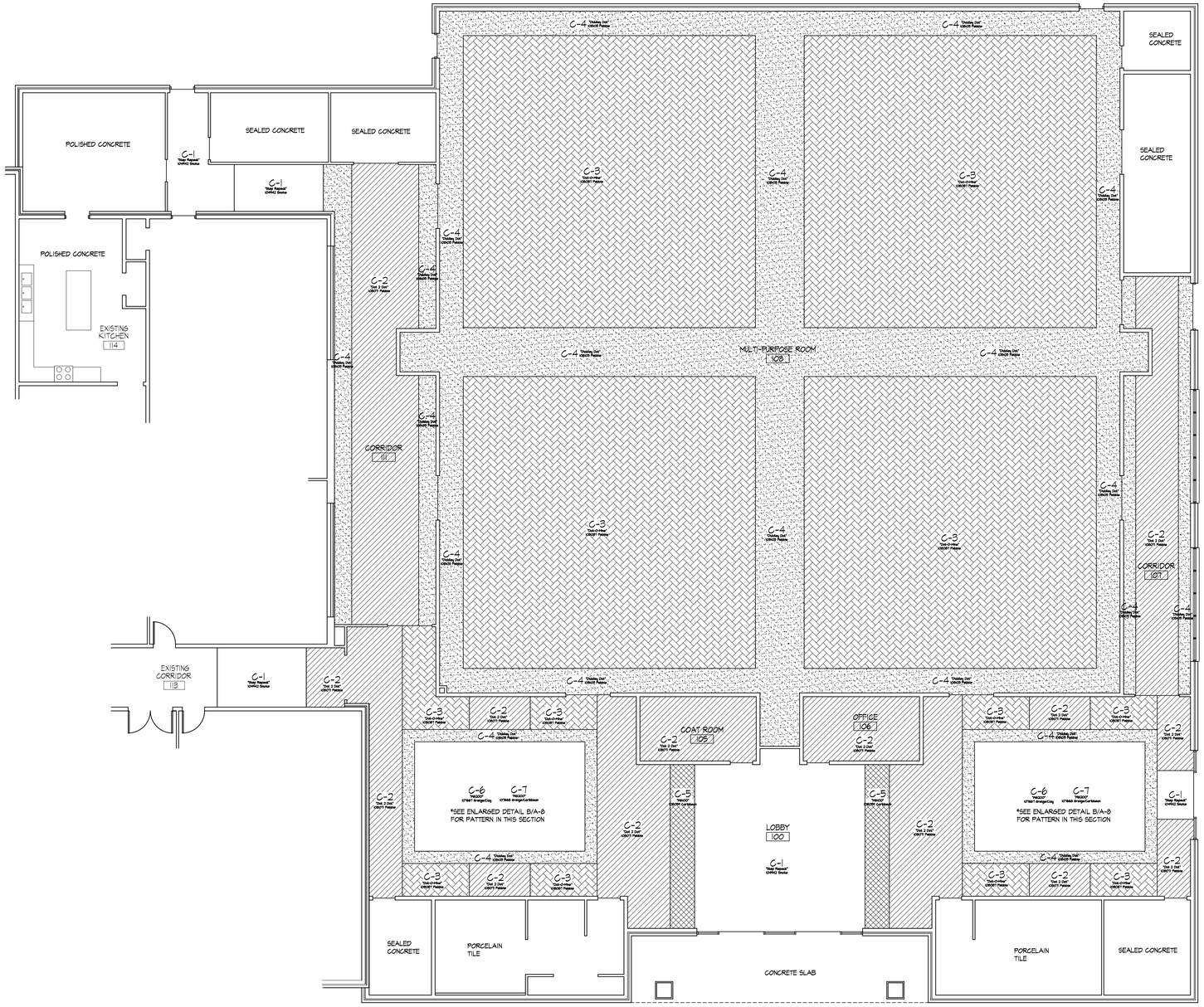

CARPET TILE PATTERN (A / A-8)
SCALE: 1/8"=1'-0"

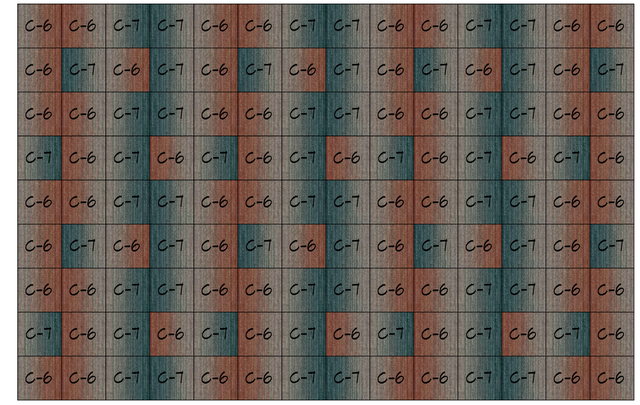

CARPET DETAIL (B / A-8)
SCALE: 1/8"=1'-0"

CARPET COLOR KEY

- C-1 Interface Flooring (walk off carpet)
  "Step Repeat - SR999", Color 104942 Smoke
  50 cm x 50 cm modular, ashlar installation
- C-2 Interface Flooring (Lobby/corridor field)
  "Dot 2 Dot - 13130", Color 108071 Pebble
  25 cm x 1 m modular planks, ashlar installation
- C-3 Interface Flooring (MP Room field)
  "Dot O-Mine - 13131", Color 108087 Pebble
  25 cm x 1 m modular planks, ashlar installation
- C-4 Interface Flooring (MP Room/corridor border)
  "Diddley Dot - 13132", Color 108103 Pebble
  25 cm x 1 m modular planks, ashlar installation
- C-5 Interface Flooring (Lobby Accent)
  "N6100 - 13127", Color 108059 Caribbean
  50 cm x 50 cm modular
- C-6 Interface Flooring (Lobby Accent)
  "N6200 - 13128", Color 107667 Greige/Clay
  50 cm x 50 cm modular
- C-7 Interface Flooring (Lobby Accent)
  "N6200 - 13128", Color 107668 Greige/Caribbean
  50 cm x 50 cm modular

MARTIN S. FRIEDMAN REGISTERED NO 2791 COMMONWEALTH OF KENTUCKY ARCHITECT
3/31/25

BUILDING ADDITION TO
THE CORBIN CENTER
CORBIN, KENTUCKY

DATE	REVISION	BY

DESIGN DOCUMENTS
The Plans and Specifications subject matter considered confidential by MSE of Kentucky, Inc. and on which MSE of Kentucky, Inc. has property rights. Neither accept nor possession thereof confers or transfer any right in or license to use the same for any purpose except as specifically agreed to in writing and therein to follow these plans, specifications and the design intent they convey.

PROJECT NO.	4137-69
DESIGNED BY	MSF/BLL
DRAWN BY	BLL
CHECKED BY	MSF
REVIEWED BY	
DATE	NOVEMBER 2024
SCALE	AS NOTED

MSE OF KENTUCKY, INC.
Engineers
Architects
Planners
624 Wellington Way
Lexington, KY 40503
www.mseilex.com
Phone: (859)223-5694
Fax: (859)223-2607

DRAWING NO.
A-8
SHEET OF

GENERAL NOTES - SCOPE OF WORK

A. SCOPE OF WORK

1. THE REQUIREMENTS HERE-IN-AFTER ARE IN ADDITION AND COMPLIMENT TO THE REQUIREMENTS, SHOWN ON THE DRAWINGS, & IN THE DWISION 26,27,& 28 SPECIFICATIONS.

2. PROVIDE ALL LABOR AND MATERIAL NECESSARY TO ACCOMPLISH THE WORK SPECIFIED HEREIN AND AS SHOWN ON THE DRAWINGS.

3. COORDINATE WORK WITH ALL OTHER TRADES.

4. VISIT THE SITE AND VERIFY EXISTING CONDITIONS.

5. REMOVE ALL WASTE AND RUBBISH FROM THE SITE ON A DAILY BASIS.

B. WARRANTY: WORKMANSHIP AND MATERIALS SHALL BE GUARANTEED FOR A PERIOD OF ONE YEAR FROM THE DATE OF FINAL ACCEPTANCE BY THE OWNER,. UON.

C. REGULATIONS

1. ELECTRICAL WORK SHALL COMPLY WITH THE FOLLOWING CODES AS PRESENTLY APPLICABLE:

a. NATIONAL ELECTRICAL CODE (NEC)

b. ENERGY CODE

c. LOCAL AND STATE CODES AND REGULATIONS

2. PERMITS: OBTAIN AND PAY FOR ALL REQUIRED PERMITS.

D. SUBMITTAL AND SHOP DRAWINGS: PRIOR TO INSTALLATION, SUBMIT CATALOG DATA FOR ALL EQUIPMENT AND MATERIALS FOR REVIEW. SUBMIT SHOP DRAWINGS SHOWING COMPLETE TERMINAL-TO-TERMINAL WIRING FOR EACH SIGNAL AND COMMUNICATION SYSTEM. THREE COPIES REQUIRED. (DOES NOT APPLY TO ALL PROJECT PHASES.)

E. OPERATIONS AND MAINTENANCE MANUALS: PROVIDE MAINTENANCE AND OPERATIONS DATA FOR ALL ELECTRICAL EQUIPMENT AND SIGNAL AND COMMUNICATIONS SYSTEMS. TWO COPIES & ONE "E" COPY ARE REQUIRED.

F. RECORD DRAWINGS: CORRECTIONS AND CHANGES MADE DURING THE PROGRESS OF THE WORK SHALL BE NEATLY RECORDED ON A SET OF DRAWINGS DEDICATED & MARKED RECORD DRAWINGS AS ACTUALLY INSTALLED FOR RECORD DRAWINGS. SUBMIT TO THE ARCHITECT UPON PROJECT COMPLETION.

G. CERTIFICATES OF INSPECTION: SUBMIT SIGNED-OFF PERMITS FROM THE CODE ENFORCING AGENCIES TO THE OWNER UPON PROJECT COMPLETION.

H. PRODUCT LISTING OR LABELING: ALL ELECTRICAL EQUIPMENT SHALL BE LISTED AND LABELED BY UNDERWRITERS?LABORATORIES, INC.

I. MATERIAL AND EQUIPMENT: ALL MATERIALS AND EQUIPMENT SHALL BE NEW UNLESS NOTED OTHERWISE. PROTECT ALL MATERIALS AND EQUIPMENT FROM DAMAGE OR CORROSION.

J. CUTTING AND PATCHING: PROVIDE ALL REQUIRED CUTTING AND PATCHING FOR THE ELECTRICAL WORK.

K. ANCHORAGE AND BRACING: PROVIDE COMPLETE SEISMIC ANCHORAGE AND BRACING FOR THE LATERAL AND VERTICAL SUPPORT OF CONDUIT AND ELECTRICAL EQUIPMENT AS REQUIRED BY THE INTERNATIONAL BUILDING CODE.

L. FIRESTOPPING: PROVIDE FIRESTOPPING FOR ALL PENETRATION IN RATED WALLS, CEILINGS AND FLOORS.

M. INSTRUCTION: CONTRACTOR SHALL INSTRUCT THE OWNER IN THE USE AND OPERATION OF ALL SYSTEMS INSTALLED UNDER THE SCOPE OF THIS CONTRACT.

LUMINAIRE SCHEDULE

TYPE	MFG	DESCRIPTION/CATALOG #	LAMP	VOLTAGE	LUMENS	WATTS/ FIXTURE	NOTES
A2	TOPAZ	PL24-50WPCTS-D	LED	120	5000 MAX	50-MAX	RECESSED IN CEILING, SWITCHABLE LUMENS, 0-10V DIMMING
D1	NICOR	CDG438SUS9CLWHMD	LED	120	3800 MAX	38 - MAX	RECESSED IN CEILING, SWITCHABLE LUMENS, 0-10V DIMMING
D2	NICOR	CDG638SUS9CLWHMD	LED	120	3800 MAX	38 - MAX	RECESSED IN CEILING, SWITCHABLE LUMENS, 0-10V DIMMING
D2B	NICOR	CDG638SUS9CLWHMD	LED	120	3800 MAX	38 - MAX	RECESSED IN CEILING, SWITCHABLE LUMENS, 0-10V DIMMING, INTERGAL BATTERY BACKUP
D3	NICOR	CDG4138SUS9CLWHMD	LED	120	3800 MAX	38 - MAX	RECESSED IN CEILING, SWITCHABLE LUMENS, 0-10V DIMMING
D3B	NICOR	CDG4138SUS9CLWHMD	LED	120	3800 MAX	38 - MAX	RECESSED IN CEILING, SWITCHABLE LUMENS, 0-10V DIMMING, INTERGAL BATTERY BACKUP
D4	NICOR	CDG6138SUS9CLWHMD	LED	120	3800 MAX	38 - MAX	RECESSED IN CEILING, SWITCHABLE LUMENS, 0-10V DIMMING, INTERGAL BATTERY BACKUP
EV	NICOR	EOT 1 MV 5K SV P S C	LED	120			
EX	NICOR	EXL4 1 UNV WH R 2 red	LED	120			LED EXIT SIGN
EXV	NICOR	EXC3 10 UNV WH R 2 SD	LED	120			LED EXIT SIGN/ EMERGENCY COMBO
L1	NICOR	LSL1445SUS8	LED	120	6200 MAX	34 - MAX	CABLE HUNG AT A MIN OF 9' AFF
P1	CUTTING EDGE INDUSTRIES	Custom 40	LED	120		15W PER BULB Med Based	48"x 24" Fabric Drum Pendant with 4 BULBS. 0-10V DIMMING. COORDINATE EXACT BLUB TYPE WITH DIMMER. Silver Organza - Styrene Hardback 4 sectionsSHADE
W1	CUTTING EDGE INDUSTRIES	WF-10X7ST-151-97-NEWSN-ADA-CUST	LED	120		15 - MAX Med Based	MAX 1 BULBS PER FIXTUER. 0-10V DIMMING. COORDINATE EXACT BLUB TYPE WITH DIMMER. Silver Organza Hardback/Self Trim inner SHADE
W2	TOPAZ	F-WPC/30W/CTS/BZ-96	LED	120	3750 MAX	30 - MAX	WALL PACK
W3	CUTTING EDGE INDUSTRIES	WF-CUS06-RIST-SVPC-CUS	LED	120		15 - MAX PER BULB Med Based	MAX 2 BULBS PER FIXTUER. 0-10V DIMMING. COORDINATE EXACT BLUB TYPE WITH DIMMER.Laser Steel fluted SHADE

LEGEND OF SYMBOLS

- WALL MT'D LUMINAIRE SEE FIXTURE SCHEDULE
- RECESSED LUMINAIRE SEE FIXTURE SCHEDULE
- INDICATES LUMINAIRE W/ EMERGENCY POWER COMPONENTS AND/OR EMERGENCY CIRCUITRY
- EXIT SIGN - CEILING MT'D SEE FIXTURE SCHEDULE SURFACE - OR PENDANT MOUNTED LUMINAIRE SEE FIXTURE SCHEDULE
- a, b, c — LOWER CASE ALPHABET AT LUMINAIRES INDICATE SWITCHING SCHEME FOR INDIVIDUAL/GROUP OF LUMINAIRES
- $ — LIGHTING CONTROL STATION - SEE KEYED NOTE REFERENCED IN EACH ROOM FOR TYPE OF CONTROL- OTHERWISE PROVIDE A SINGLE POLE SWITCH
- $ — KEYED SWITCH WITH PILOT LIGHT K/PL
- PP — LIGHTING CONTROLLER, LOW VOLTAGE RELAY - POWER PACK
- OC — OCCUPANCY SENSOR, DUAL TECHNOLOGY CEILING MT'D
- DS — DAYLIGHT SENSOR, CEILING MT'D
- 3$ — SWITCH WITH NUMERAL- 2=2 POLE 3=3 POLE 4= 4 WAY
- DUPLEX CONVENIENCE RECEPTACLE 120 VOLT
- QUADPLEX RECEPTACLE- (2) DUPLEX RECEPTACLES IN 2 GANG BOX WITH 2 GANG PLASTER RING 120 VOLT
- 120 VOLT GROUND FAULT INTERRUPTING DUPLEX RECEPTACLE
- 120 VOLT DUPLEX CONVENIENCE RECEPTACLE MT'D ABOVE A COUNTERTOP
- 120 VOLT DUPLEX CONVENIENCE RECEPTACLE WITH SPLIT WIRED, TOP WIRED HOT, BOTTOM SWITCH AS INDICATED
- 120 VOLT GROUND FAULT INTERRUPTING DUPLEX RECEPTACLE MT'D ABOVE A COUNTERTOP
- SPECIALTY OUTLET. COORDINATE WITH NOTES.
- EWC — ELECTRIC WATER COOLER OUTLET, SINGLE OUTLET
- WP/GFI — WEATHER PROOF GFI 120 VOLT DUPLEX RECEPTACLE MT'D OUTSIDE ABOVE GRADE OR AT ROOFTOP HVAC UNITS
- FLUSH FLOOR COMBINATION POWER & DATA OUTLET 120 VOLT
- FLUSH FLOOR SINGLE POWER OUTLET 120 VOLT
- FLUSH FLOOR COMMUNICATIONS OUTLET
- EMPTY DATA/TELEPHONE OUTLET BOX; PROVIDE WITH BLANK FACEPLATE & 3/4" EMT CONDUIT STUB-OUT ABOVE CORRIDOR CELING
- J — JUNCTION BOX AS NOTED
- WALL MT'D PUSH BUTTON AS NOTED:
- NON FUSED DISCONNECT SWITCH AS NOTED
- FUSED DISCONNECT SWITCH AS NOTED
- MAGNETIC STARTER SEE NOTES AND/OR SPECS
- COMBINATION STARTER/DISCONNECT. SEE NOTES AND/OR SPECS
- MOTOR CONNECTION
- EXHAUST FAN CONNECTION
- MOTORIZED DAMPER CONNECTION
- $M — MANUAL MOTOR RATED FRACTIONAL HP SWITCH
- FV — FIRE ALARM AUDIO/VISUAL SPEAKER NOTIFICATION APPLIANCE
- FIRE ALARM AUDIO/VISUAL NOTIFICATION APPLIANCE
- FIRE ALARM VISUAL ONLY (STROBE) NOTIFICATION APPLIANCE
- FIRE ALARM MANUAL PULL STATION
- P — TBD
- S D — FIRE ALARM DUCT MT'D SMOKE DETECTOR
- F H — FIRE ALARM HEAT DETECTOR - CEILING MT'D
- F S — FIRE ALARM SMOKE DETECTOR - CEILING MT'D
- TS — FIRE ALARM TAMPER SWITCH CONNECTION AT SPRINKLE SYSTEM
- FS — FIRE ALARM FLOW SWITCH CONNECTION AT SPRINKLY SYSTEM
- PIV — FIRE ALARM POST INDICATING VALVE AT SPRINKLE SYSTEM
- FACP — FIRE ALARM SYSTEM CONTROL PANEL
- A — FIRE ALARM SYSTEM REMOTE ANNUNCIATOR
- M — FIRE ALARM SYSTEM ELECTROMAGNETIC DOOR HOLDER
- KP — SECURITY SYSTEM KEY PAD
- C — SECURITY SYSTEM CAMERA
- S — CEILING MT'D SPEAKER
- S — COLUMN OR WALL MT'D SPEAKER
- TV — WALL MT'D TV OUTLET
- SPD — SURGE PROTECTION DEVICE ALSO REFERENCED AS TVSS
- INDICATES CONDUIT IN FLOOR SLAB, CEILING BELOW OR BELOW GRADE
- INDICATES CONDUIT CONCEALED ABOVE CEILING IN WALL OR EXPOSED ON SURFACE ABOVE
- HOME RUN CIRCUIT CONDUCTORS TO BRANCH CIRCUIT PANEL
- CONDUIT
- EXTERIOR EMERGENCY EGRESS PERSONNEL DOOR LUMINAIRE WITH EMERGENCY POWER COMPONENTS - SEE FIXTURE SCHEDULE
- EXTERIOR BUILDING MT'D AREA SECURITY LUMINAIRE - SEE FIXTURE SCHEDULE
- POLE MT'D LUMINAIRE IN PARKING LOT - SEE FIXTURE SCHEDULE
- LANDSCAPE LIGHTING COMPONENT - SEE FIXTURE SCHEDULE
- ADJUSTABLE ARM TRUCK DOCK FLOOD LIGHT
- AFF — ABOVE FINISHED FLOOR
- EC — ELECTRICAL CONTRACTOR
- MC — MECHANICAL CONTRACTOR
- UNO — UNLESS NOTED OTHERWISE
- AFG — ABOVE FINISHED GRADE
- EWC — ELECTRIC WATER COOLER
- NL — NIGHTLIGHT CIRCUIT
- WP — WATER PROOF
- POS — POINT OF SERVICE
- GFI — GROUND FAULT INTERRUPTER RECEPTACLE
- FBO — FURNISHED BY OTHERS
- FDS — FUSED DISCONNECT SWITCH
- UON — UNLESS OTHERWISE NOTED
- NFDS — NON-FUSED DISCONNECT SWITCH
- EQUIPMENT MT'D JUNCTION BOX
- — D — INDICATES CONDUIT FOR DATA
- — T — INDICATES CONDUIT FOR TELEPHONE
- XFMR — TRANSFORMER

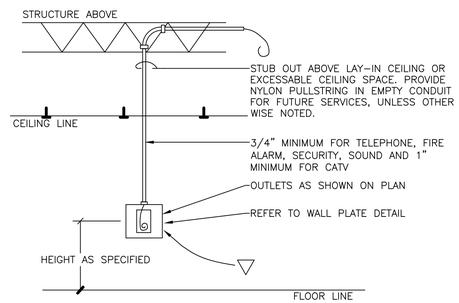

ROUGH-IN DETAIL FOR STUB-OUTS

SCALE: N.T.S.

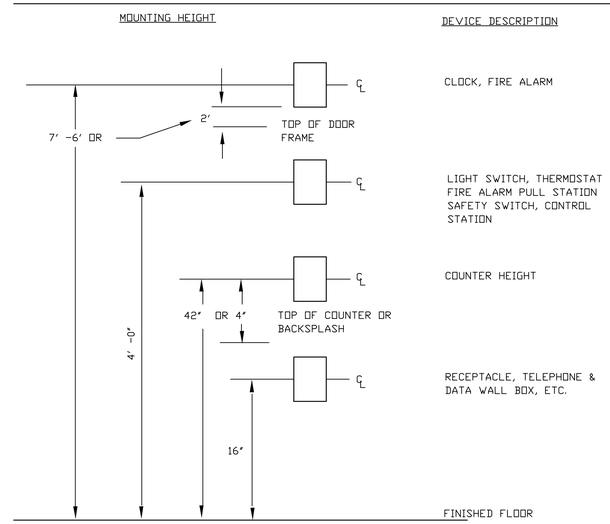

DEVICE MOUNTING DETAIL

SCALE: N.T.S.

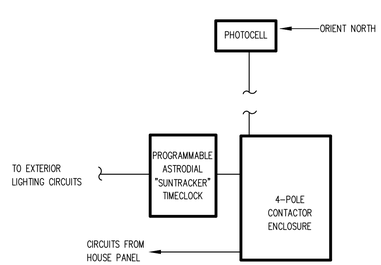

SCHEME DESCRIPTION

LIGHTING ON WITH PHOTOCELL, OFF WITH TIMECLOCK SERVING FRONT FACADE LIGHTING AND REAR SECURITY LIGHTING

EXTERIOR BUILDING LIGHTING DIAGRAM

SCALE: N.T.S.

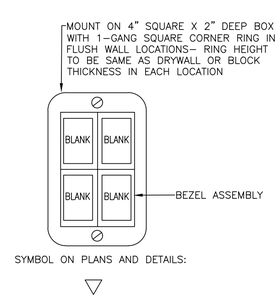

DETAIL OF TYPICAL TELE-DATA WALLPLATE

SCALE: N.T.S.

STATE OF KENTUCKY
CHARLES MATTHEW CLIB
15300
LICENSED
PROFESSIONAL ENGINEER

TECHNICAL HORIZONS
Industrial • Commercial • Institutional
501 Darby Creek, Ste. 31, Lexington, KY
859.254.5363

BUILDING ADDITION TO THE CORBIN CENTER
CORBIN, KENTUCKY

DATE	REVISION	BY

DESIGN DOCUMENTS
The design professional waives any and all responsibility and liability for problems which arise from failure to follow the drawings, specifications and the design intent they convey.

PROJECT NO. 4037-00
DESIGNED BY JF/AM
DRAWN BY AJ/JF
CHECKED BY MM
REVIEWED BY MM
DATE [redacted]
SCALE [redacted]

MSE OF KENTUCKY, INC.
Engineers Architects Planners
624 Wellington Way
Lexington, KY 40503
www.msekentucky.com
Phone: (859)223-5694
Fax: (859)223-2607

DRAWING NO.
E-0
SHEET OF

TAGGED NOTES

1. DEMOLISH EXISTING WELDING/SPECIALITY OUTLETS CONDUCTORS AND ASSOCIATED AND SURFACE MOUNTED WIREWAYS. DEMOLISH CIRCUITS BACK TO SOURCE PANEL. MARK BREAKERS AS SPARES FOR FUTURE USE.
2. DEMOLISH EXISTING EXTERIOR EGRESS LIGHT AND EXISTING FIRE ALARM PULL STATION. DEMOLISH CIRCUITING AND CABLING BACK TO SOURCES. ENSURE ALL DOWNSTREAM DEVICES NOT INDICATED AS DEMOLISHED REMAIN OPERATIONAL.
3. DEMOLISH EXISTING EXTERIOR RECEPTACLE. REMOVE CIRCUITRY BACK TO SOURCE PANEL. ENSURE ALL DOWNSTREAM DEVICES NOT INDICATED AS DEMOLISHED REMAIN OPERATIONAL

GENERAL NOTES

1. UNLESS OTHERWISE SPECIFICALLY NOTED AND TAGGED TO BE DEMOLISHED ALL DEVICES & ELECTRICAL APPARATUS SHOWN IN THE EXISTING CORBIN CENTER ARE EXISTING & SHALL REMAIN.

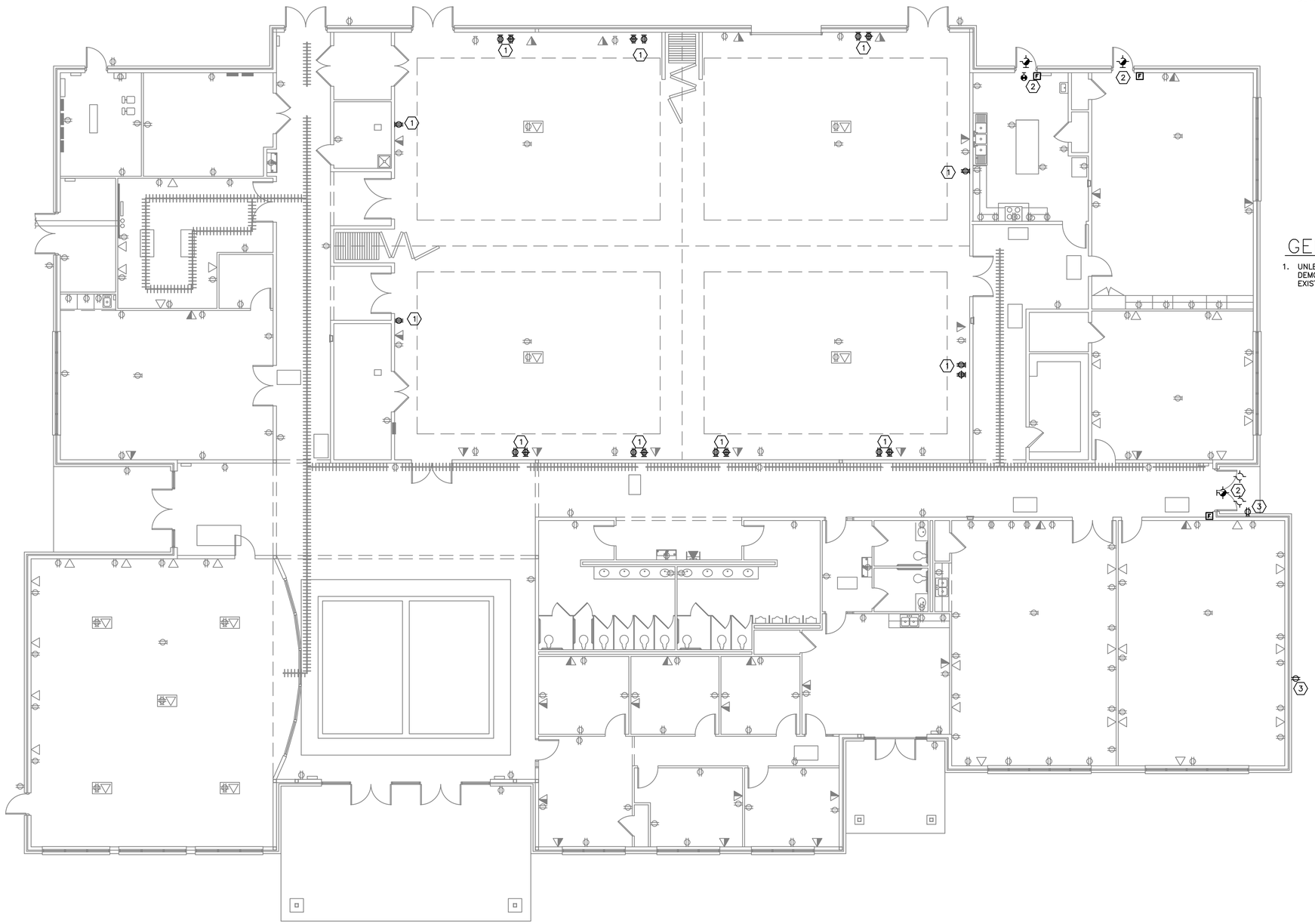

PARTIAL FLOOR PLAN - EXISITNG BUILDING ELECTRICAL DEMOLITION

SCALE: 1/8" = 1'-0"

STATE OF KENTUCKY
CHARLES MATTHEW CLIB
15300
LICENSED
PROFESSIONAL ENGINEER

TECHNICAL HORIZONS
Industrial • Commercial • Institutional
501 Darby Creek, Ste. 31, Lexington, KY
859.263.5363

BUILDING ADDITION TO
THE CORBIN CENTER
CORBIN, KENTUCKY

DATE	REVISION	BY

DESIGN DOCUMENTS
The design professional waives any and all responsibility and liability for problems which arise from failure to follow these drawings, specifications and the design intent they convey.

PROJECT NO. 4057-00
DESIGNED BY JF/JM
DRAWN BY AJ/JF
CHECKED BY JM
REVIEWED BY JM
DATE October 2024
SCALE AS NOTED

MSE OF KENTUCKY, INC.
Engineers
Architects
Planners
624 Wellington Way
Lexington, KY 40503
www.mseinc.com
Phone: (859)223-5694
Fax: (859)223-3607

DRAWING NO.
E-1
SHEET OF

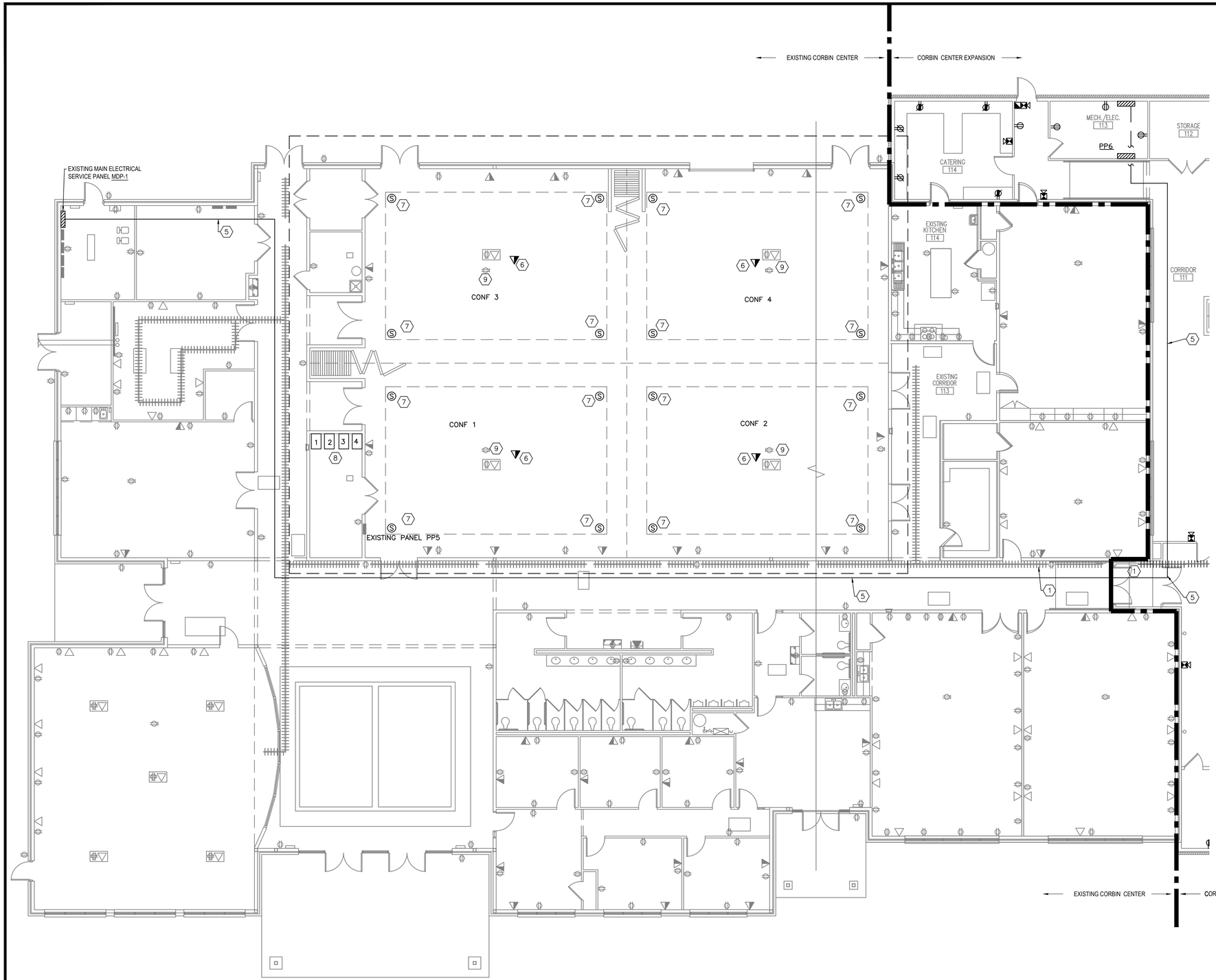

TAGGED NOTES

1. CONNECT TO AND EXTEND EXISTING CABLE TRAY INTO NEW BUILDING EXTENSION ABOVE CEILING AND TURN INTO AV ROOM
2. CEILING MOUNTED PROJECTORS. PROVIDE 120V 20A RECEPTACLE AND CONNECTION FOR AV. PROJECTOR TO BE CONNECTED TO CORDONING AV CONTROLLER
3. FLUSH MOUNTED FLOOR BOX WITH QUAD OUTLET. COORDINATE EXACT FINISH AND COVER TYPE WITH ARCHITECT TO MATCH FLOOR.
4. ELECTRICAL CONNECTION FOR PROJECTOR SCREEN. SCREEN CONTROLLED WITH WALL MOUNTED, 3 POSITION MOMENTARY CONTACT SWITCH. PROVIDE ENLARGED LABEL ON SWITCH PLATE COVER
5. INSTALL NEW OVERHEAD FEEDER FROM EXISTING MDP–1 TO NEW MDP–2. COORDINATE EXACT PATH IN FIELD. (2) 4" CONDUITS BE HELD TIGHT TO DECK. COORDINATE WITH SINGLE LINE FOR EXACT FEEDER CONDUCTOR SIZES REQUIRED.
6. CEILING MOUNTED 360 CAMERA AND MICROPHONE TO OUTPUT OF CORRESPONDENCE MULTI–PURPOSE ROOM CONTROLLER
7. CEILING MOUNTED SPEAKER TO RECEIVE INPUT CORRESPONDING FROM MULTI–PURPOSE CONTROLLER
8. CONTROLLERS FOR MULTI–PURPOSE ROOM, SECTIONS 1, 2, 3, & 4. EACH CONTROLLER TO RECEIVE ALL AV INPUTS AND OUTPUT TO AV EQUIPMENT FROM THEIR CORRESPONDING SECTIONS. EACH CONTROLLER SHALL HAVE THE ABILITY TO OVERRIDE THE OUTPUT OF EACH HIGHER ITERATED CONTROLLER. (IE CONTROLLER 1 CAN OVERRIDE THE OUTPUTS FOR CONTROLLER 2,3,&4; CONTROLLER 2 CAN OVERRIDE THE OUTPUTS FOR 3,&4 ETC). CIRCUIT EACH CONTROLLER TO A NEW CIRCUIT IN EXISTING PANEL PP5. PROVIDE PROVISIONS FOR A MAXIMUM OF 20 WIRELESS MICROPHONE INPUTS FOR EACH CONTROLLER. PROVIDE 20 WIRELESS MICROPHONES.
9. EXISTING OVERHEAD PROJECTOR. INTERCEPT EXISTING INPUT AND OUTPUT SIGNALS AND ROUT THROUGH CORRESPONDING CONTROLLER.
10. CONTROLLERS FOR CONFERENCE ROOM SECTION 1, 2, 3, & 4. EACH CONTROLLER TO RECEIVE ALL AV INPUTS AND OUTPUT TO AV EQUIPMENT FROM THEIR CORRESPONDING SECTIONS. EACH CONTROLLER SHALL HAVE THE ABILITY TO OVERRIDE THE OUTPUT OF EACH HIGHER ITERATED CONTROLLER. (IE CONTROLLER 1 CAN OVERRIDE THE OUTPUTS FOR CONTROLLER 2,3,&4; CONTROLLER 2 CAN OVERRIDE THE OUTPUTS FOR 3,&4 ETC). PROVIDE PROVISIONS FOR A MAXIMUM OF 20 WIRELESS MICROPHONE INPUTS FOR EACH CONTROLLER. PROVIDE 20 WIRELESS MICROPHONES
11. LOCATION FOR WALL MOUNTED MONITOR. COORDINATE EXACT HEIGHT OF POWER AND DATA CONNECTION WITH OWNER PRIOR TO ROUGH IN. ROUTE AV CONNECTION THROUGH CORRESPONDING CONTROLLER.
12. DEDICATED POWER AND DATA CONNECTION FOR WALL MOUNTED MONITORS. COORDINATE EXACT HEIGHT AND LOCATION WITH OWNER.

GENERAL NOTES

1. UNLESS OTHERWISE SPECIFICALLY NOTED AND/OR TAGGED ALL DEVICES SHOWN IN THE EXISTING CORBIN CENTER ARE EXISTING & SHALL REMAIN.
2. NEW WORK FOR AV SYSTEM SHOWN IN EXISTING CONFERENCE AREAS #1, #2, #3 & #4, AND DESCRIBE IN THE ASSOCIATED TAGGED NOTES ARE TO BE INCLUDED IN THE BID AS ELECTRICAL ADD ALTERNATE #1.

PARTIAL FLOOR PLAN - EXISITNG BUILDING ELECTRICAL NEW WORK

SCALE: 1/8" = 1'-0"

STATE OF KENTUCKY
CHARLES MATTHEW CLIB
19330
LICENSED PROFESSIONAL ENGINEER

TECHNICAL HORIZONS
Industrial • Commercial • Institutional
501 Darby Creek, Ste. 31, Lexington, KY
859.263.5363

BUILDING ADDITION TO
THE CORBIN CENTER
CORBIN, KENTUCKY

DATE	REVISION	BY

DESIGN DOCUMENTS
The design professional serves and will responsibility and liability for problems which arise from failure to follow the plans, specifications and the design intent they convey.

PROJECT NO. 4157-00
DESIGNED BY JF / AM
DRAWN BY AJ / JF
CHECKED BY BM
REVIEWED BY
DATE October 2024
SCALE 1/8" = 1'-0"

MSE OF KENTUCKY, INC.
Engineers
Architects
Planners
624 Wellington Way
Lexington, KY 40503
www.mseinc.com
Phone: (859)223-5694
Fax: (859)223-2607

DRAWING NO.
E – 2

SHEET OF

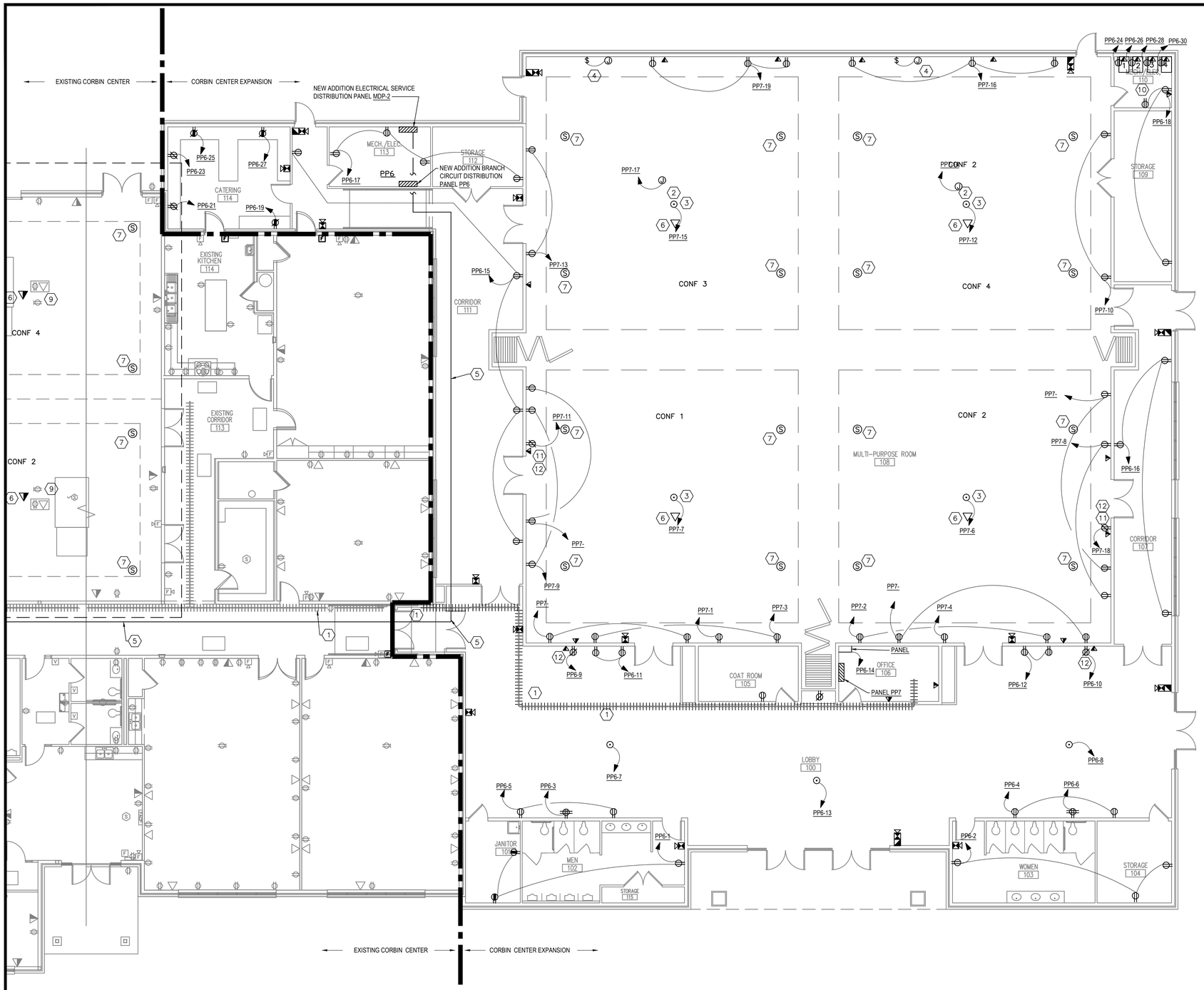

PARTIAL FLOOR PLAN - BUILDING EXPANSION POWER

SCALE: 1/8" = 1'-0"

TAGGED NOTES

1. CONNECT TO AND EXTEND EXISTING CABLE TRAY INTO NEW BUILDING EXTENSION ABOVE CEILING AND TURN INTO AV ROOM
2. CEILING MOUNTED PROJECTORS. PROVIDE 120V 20A RECEPTACLE AND CONNECTION FOR AV. PROJECTOR TO BE CONNECTED TO CORDONING AV CONTROLLER
3. FLUSH MOUNTED FLOOR BOX WITH QUAD OUTLET. COORDINATE EXACT FINISH AND COVER TYPE WITH ARCHITECT TO MATCH FLOOR.
4. ELECTRICAL CONNECTION FOR PROJECTOR SCREEN. SCREEN CONTROLLED WITH WALL MOUNTED, 3 POSITION MOMENTARY CONTACT SWITCH. PROVIDE ENLARGED LABEL ON SWITCH PLATE COVER
5. INSTALL NEW OVERHEAD FEEDER FROM EXISTING MDP–1 TO NEW MDP–2. COORDINATE EXACT PATH IN FIELD. (2) 4" CONDUITS BE HELD TIGHT TO DECK. COORDINATE WITH SINGLE LINE FOR EXACT FEEDER CONDUCTOR SIZES REQUIRED.
6. CEILING MOUNTED 360 CAMERA AND MICROPHONE TO OUTPUT OF CORRESPONDENCE MULTI–PURPOSE ROOM CONTROLLER
7. CEILING MOUNTED SPEAKER TO RECEIVE INPUT CORRESPONDING FROM MULTI–PURPOSE CONTROLLER
8. CONTROLLERS FOR MULTI–PURPOSE ROOM, SECTIONS 1, 2, 3, & 4. EACH CONTROLLER TO RECEIVE ALL AV INPUTS AND OUTPUT TO AV EQUIPMENT FROM THEIR CORRESPONDING SECTIONS. EACH CONTROLLER SHALL HAVE THE ABILITY TO OVERRIDE THE OUTPUT OF EACH HIGHER ITERATED CONTROLLER. (IE CONTROLLER 1 CAN OVERRIDE THE OUTPUTS FOR CONTROLLER 2,3,&4; CONTROLLER 2 CAN OVERRIDE THE OUTPUTS FOR 3,&4 ETC). CIRCUIT EACH CONTROLLER TO A NEW CIRCUIT IN EXISTING PANEL PP5. PROVIDE PROVISIONS FOR A MAXIMUM OF 20 WIRELESS MICROPHONE INPUTS FOR EACH CONTROLLER. PROVIDE 20 WIRELESS MICROPHONES.
9. EXISTING OVERHEAD PROJECTOR. INTERCEPT EXISTING INPUT AND OUTPUT SIGNALS AND ROUT THROUGH CORRESPONDING CONTROLLER.
10. CONTROLLERS FOR CONFERENCE ROOM SECTION 1, 2, 3, & 4. EACH CONTROLLER TO RECEIVE ALL AV INPUTS AND OUTPUT TO AV EQUIPMENT FROM THEIR CORRESPONDING SECTIONS. EACH CONTROLLER SHALL HAVE THE ABILITY TO OVERRIDE THE OUTPUT OF EACH HIGHER ITERATED CONTROLLER. (IE CONTROLLER 1 CAN OVERRIDE THE OUTPUTS FOR CONTROLLER 2,3,&4; CONTROLLER 2 CAN OVERRIDE THE OUTPUTS FOR 3,&4 ETC). PROVIDE PROVISIONS FOR A MAXIMUM OF 20 WIRELESS MICROPHONE INPUTS FOR EACH CONTROLLER. PROVIDE 20 WIRELESS MICROPHONES
11. LOCATION FOR WALL MOUNTED MONITOR. COORDINATE EXACT HEIGHT OF POWER AND DATA CONNECTION WITH OWNER PRIOR TO ROUGH IN. ROUTE AV CONNECTION THROUGH CORRESPONDING CONTROLLER.
12. DEDICATED POWER AND DATA CONNECTION FOR WALL MOUNTED MONITORS. COORDINATE EXACT HEIGHT AND LOCATION WITH OWNER.

STATE OF KENTUCKY
CHARLES MATTHEW ELB
19300
LICENSED
PROFESSIONAL ENGINEER

TECHNICAL HORIZONS
Industrial • Commercial • Institutional
501 Darby Creek, Ste. 31, Lexington, KY
859.254.5363

BUILDING ADDITION TO
THE CORBIN CENTER
CORBIN, KENTUCKY

DATE	REVISION	BY

DESIGN DOCUMENTS
The design professional waives any and all responsibility and liability for problems which arise from failure to follow the plans, specifications and the design intent they convey.
COPYRIGHT ©
This document discloses subject matter considered confidential by MSE of Kentucky, Inc. and on which, MSE of Kentucky, Inc. claims proprietary rights which are protected by law. Recipient by accepting this document agrees to not reproduce the document or any part thereof, or to disclose any information contained therein to any other person or firm for any purpose other than those expressed in writing or drawing, etc.

PROJECT NO. 4037-0
DESIGNED BY JF/JM
DRAWN BY AJ/JF
CHECKED BY JM
REVIEWED BY JM
DATE October 2024
SCALE AS NOTED

MSE OF KENTUCKY, INC.
Engineers
Architects
Planners
624 Wellington Way
Lexington, KY 40503
www.mseinc.com
Phone: (859)223-5694
Fax: (859)223-3607

DRAWING NO.
E-3
SHEET OF

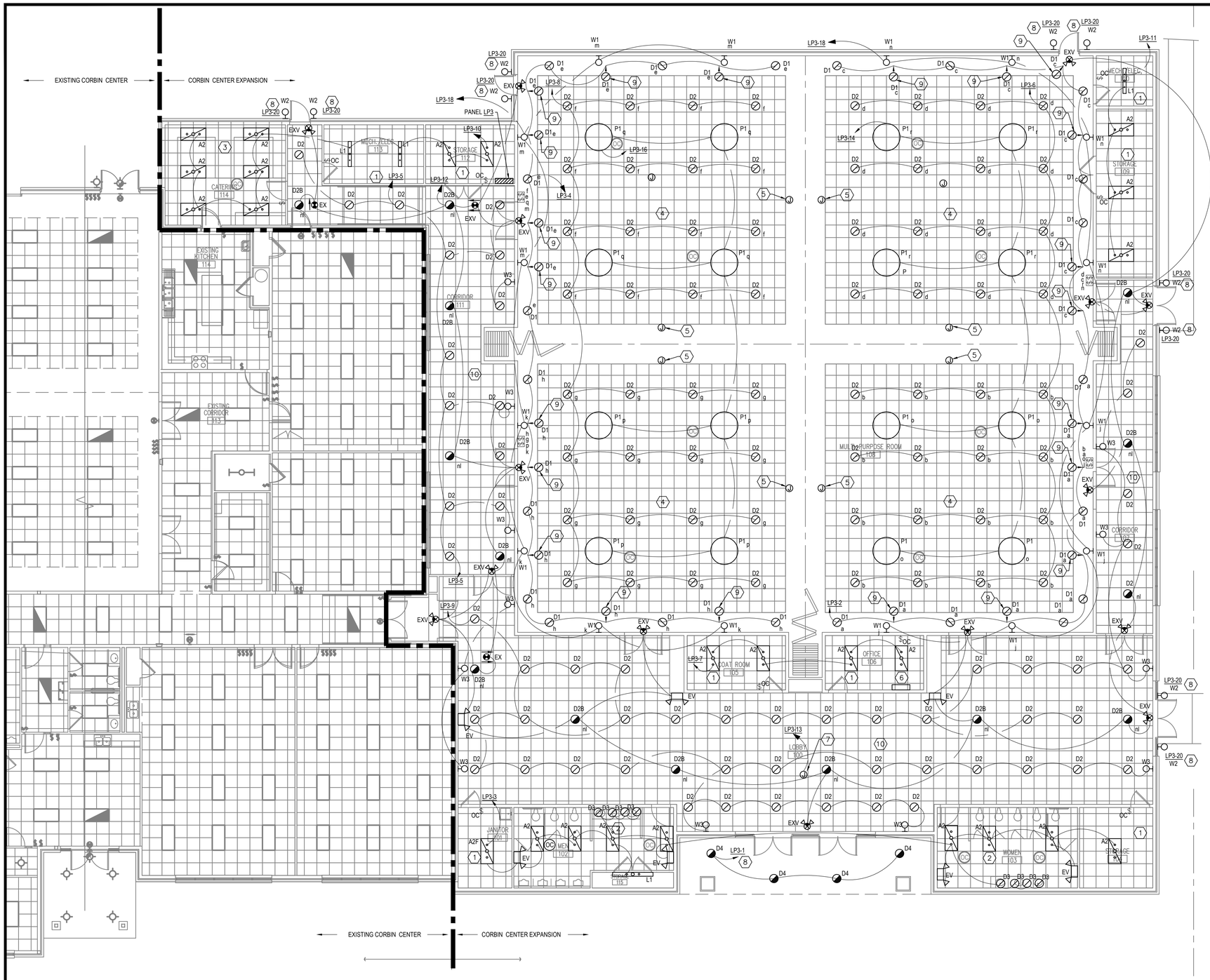

PARTIAL FLOOR PLAN - BUILDING EXPANSION LIGHTING

SCALE: 1/8" = 1'-0"

TAGGED NOTES

1. LIGHTING IN THIS ROOM CONTROLLED WITH WALL MOUNTED VACANCY SENSOR.
2. LIGHTING IN THIS ROOM CONTROLLED WITH CEILING MOUNTED ON/OFF OCCUPANCY SENSORS UNLESS OTHERWISE NOTED.
3. LIGHTING IN THIS ROOM CONTROLLED WITH WALL MOUNTED LOW VOLTAGE ON/OFF SWITCH AND CEILING MOUNTED VACANCY SENSOR.
4. MULTI PURPOSE ROOM LTS CONTROLLED WITH INDICATED LOW VOLTAGE TOUCH SCREEN CONTROL STATIONS. EACH QUARTER TO HAVE 1 CONTROL STATION. CONTROL SIMILAR SECTIONS TOGETHER (a,c,e,h & b,d,g,f) TOGETHER WHEN MODULAR WALL IS OPEN, OTHERWISE
5. BEAM DETECTOR FOR MODULAR WALLS TO DETERMINE IF WALLS ARE OPEN OR CLOSED.
6. 32 POLE LIGHTING CONTROL DIMMING RELAY PANEL FOR MULTIPURPOSE ROOM LIGHTING CONTROL.
7. PROVIDE JUNCTION BOX IN CEILING WITH A MAXIMUM WEIGHT OF 100 LBS FOR FUTURE LIGHTING. PROVIDE 1" CIRCUIT TO PANEL LP3
8. EXTERIOR LIGHTING CONTROLLED WITH CONTRACTOR IN NEW ELECTRICAL ROOM. EXPAND EXISTING EXTERIOR LIGHTING CONTROLS CONTACTS. PROVIDE 500W EMERGENCY BATTERY INVERTER IN ELECTRICAL ROOM FOR EMERGENCY BACKUP OF WALL PACS
9. THIS TYPE "D1" DOWNLIGHT LOCATION IS SHOWN CLARITY. IT SHALL BE MOUNTED IN LINE WITH THE TWO TYPE "D1" LUMINAIRES ON EACH SIDE OF IT.
10. LIGHTING IN LOBBY AND CORRIDORS TO BE CONTROLLED WITH TIME CLOCK IN ELECTRICAL ROOM. PROVIDE 2HR OVERRIDE SWITCH FOR MANUAL ON CONTROL OF LIGHTS AFTER HOURS.

STATE OF KENTUCKY
CHARLES MATTHEW ELB
15320
LICENSED PROFESSIONAL ENGINEER

TECHNICAL HORIZONS
Industrial • Commercial • Institutional
501 Darby Creek Site 31, Lexington, KY
859.254.5363

BUILDING ADDITION TO THE CORBIN CENTER
CORBIN, KENTUCKY

DATE	REVISION	BY

DESIGN DOCUMENTS:
The design professional waives any and all responsibility and liability for problems which arise from failure to follow the plans, specifications and the design intent they convey.

PROJECT NO. 4137-00
DESIGNED BY JF/JM
DRAWN BY AJ/JF
CHECKED BY JM
REVIEWED BY
DATE October 2, 2015
SCALE AS NOTED

MSE OF KENTUCKY, INC.
Engineers
Architects
Planners
624 Wellington Way
Lexington, KY 40503
www.msekc.com
Phone: (859)223-5694
Fax: (859)223-2607

DRAWING NO.
E-4

SHEET OF

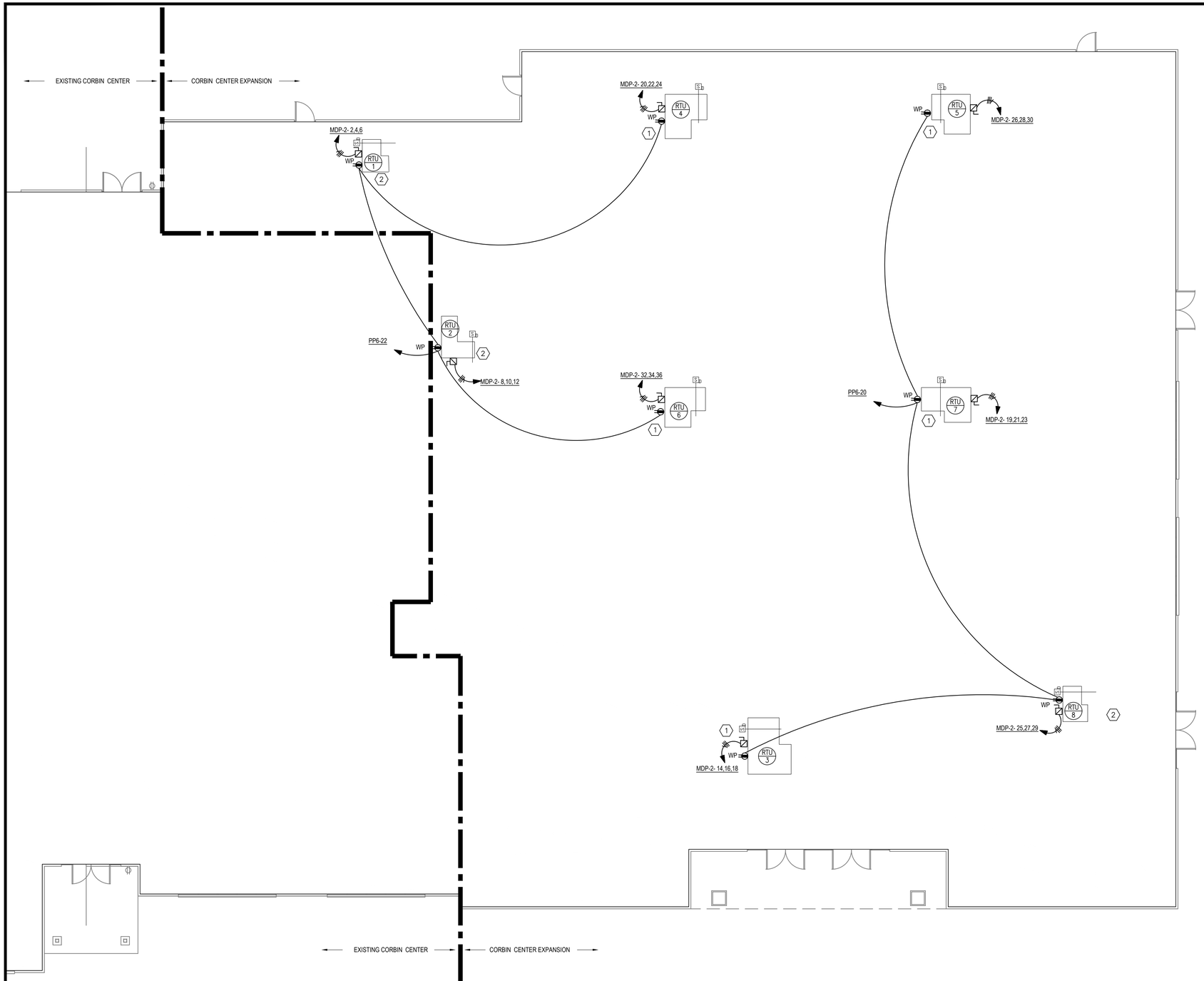

PARTIAL ROOF PLAN - BUILDING EXPANSION POWER

SCALE: 1/8" = 1'-0"

TAGGED NOTES

1. PROVIDE 200A NEMA 3R FUSED DISCONNECT ON ROOF FOR MECHANICAL EQUIPMENT. COORDINATE EXACT FUSING WITH MECHANICAL CONTRACTOR. PROVIDE DUCT SMOKE DETECTORS FOR MECHANICAL UNIT UNDER DIVISION 28, INSTALLED IN DUCT AND CONNECTED TO UNIT UNDER DIVISION 25, AND CONNECTED TO FIRE ALARM SYSTEM UNDER DIVISION 26.

2. PROVIDE 60A NEMA 3R FUSED DISCONNECT ON ROOF FOR MECHANICAL EQUIPMENT. COORDINATE EXACT FUSING WITH MECHANICAL CONTRACTOR. PROVIDE DUCT SMOKE DETECTORS FOR MECHANICAL UNIT UNDER DIVISION 28, INSTALLED IN DUCT AND CONNECTED TO UNIT UNDER DIVISION 25, AND CONNECTED TO FIRE ALARM SYSTEM UNDER DIVISION 26.

STATE OF KENTUCKY
CHARLES MATTHEW CLIB
16300
LICENSED
PROFESSIONAL ENGINEER

TECHNICAL HORIZONS
Industrial • Commercial • Institutional
501 Darby Creek, Ste. 31, Lexington, KY
859.263.5363

BUILDING ADDITION
TO
THE CORBIN CENTER
CORBIN, KENTUCKY

DATE	REVISION	BY

DESIGN DOCUMENTS
The design professional asserts and all responsibility and liability for problems which arise from failure to follow the plans, specifications and the design intent they convey.

PROJECT NO. 4157-00
DESIGNED BY JF / AM
DRAWN BY AJ / JF
CHECKED BY RM
REVIEWED BY RM
DATE OCTOBER 2004
SCALE AS NOTED

MSE OF KENTUCKY, INC.
Engineers
Architects
Planners
624 Wellington Way
Lexington, KY 40503
www.mseinc.com
Phone: (859)223-5694
Fax: (859)223-2607

DRAWING NO.
E-5

SHEET OF

TAGGED NOTES

1. DEMOLISH EXISTING POLE LIGHT, BASE, AND UNDERGROUND CONDUIT/CONDUCTORS BACK TO SOURCE. ENSURE ANY EXISTING DOWNSTREAM DEVICES ARE OPERATIONAL AFTER DEMOLITION.

PARTIAL FLOOR PLAN - EXISTING BUILDING ELECTRICAL DEMOLITION

SCALE: 1 : 10

STATE OF KENTUCKY
CHARLES MATTHEW CLIB
15390
LICENSED
PROFESSIONAL ENGINEER

TECHNICAL HORIZONS
Industrial • Commercial • Institutional
501 Darby Creek, Ste. 31, Lexington, KY
859.263.5363

BUILDING ADDITION
TO
THE CORBIN CENTER
CORBIN, KENTUCKY

DATE	REVISION	BY

DESIGN DOCUMENTS
The design professional waives any and all responsibility and liability for problems which arise from failure to follow these drawings, specifications and the design intent they convey.

PROJECT NO. 4037-00
DESIGNED BY JF / JM
DRAWN BY AJ / JF
CHECKED BY JJM
REVIEWED BY JJM
DATE October 2, 2024
SCALE AS NOTED

MSE OF KENTUCKY, INC.
Engineers
Architects
Planners
624 Wellington Way
Lexington, KY 40503
www.msekentucky.com
Phone: (859)223-5694
Fax: (859)223-2607

DRAWING NO.
E-6
SHEET OF

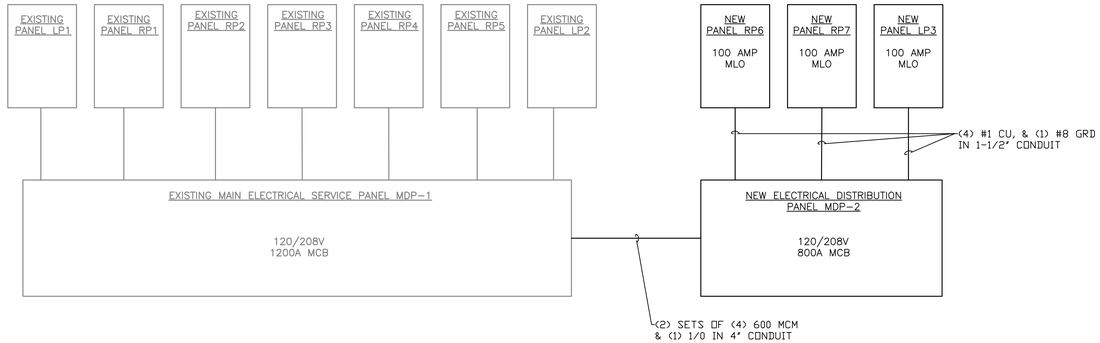

ELECTRICAL POWER SINGLE LINE

SCALE: NTS

EXISTING PANEL: MDP-1

VOLTAGE: 120 /208V
PHASES: 3
WIRES: 4
GROUND: INSULATED

MINIMUM INTERRUPTING RATING:		MAIN LUG RATING:	1200
		MAIN BREAKER RATING:	1200

POLE NO.	C.B. TRIP	C.B. POLES	CIRCUIT SERVED	WIRE SIZE	Load Category	LOAD VA	A	B	C	LOAD VA	Load Category	WIRE SIZE	CIRCUIT SERVED	C.B. POLES	C.B. TRIP	POLE NO.
1					L		0				R					2
3	225	3	(EX) LP1	4/0	L			0			R	4/0	(EX) PP1	3	225	4
5					L				0		R					6
7					R		0				P					8
9	225	3	(EX) PP2	4/0	R			0			P	4/0	(EX) PP3	3	225	10
11					R				0		P					12
13					P		0				M					14
15	225	3	(EX) PP4	4/0	P			0			M	6	(EX) M-21	3	50	16
17					P				0		M					18
19					M		0				M					20
21	50	3	(EX) M-23	6	M			0			M	6	(EX) M-25	3	50	22
23					M				0		M					24
25					M		0				R					26
27	50	3	(EX) M-28	6	M			0			R	4/0	(EX) PP5	3	225	28
29					M				0		R					30
31					L		76890			76889.67	P					32
33	125	3	(EX) LP2	1/0	L			76890		76889.67	P		MDP-2	3	800	34
35					L				76890	76889.67	P					36

TOTAL KVA PER PHASE:	103.5	103.5	103.5	RECEPT (R)	100%	0		0	100%	(C) CONT
TOTAL CONNECTED KVA:	310.47			LIGHT (L)	100%	0		0	100%	(NC)NONCONT
				MOTOR(M)	100%	0	DEMAND CACLS (KVA)	0	100%	(K)KITCHEN
TOTAL DEMAND:	310.47			HEAT(H)	100%	0		0	100%	(WR) WELD
DEMAND AMPS:	862.4			PANELS (P)	100%	310				

PANEL: MDP-2

VOLTAGE: 120 /208V
PHASES: 3
WIRES: 4
GROUND: INSULATED

MINIMUM INTERRUPTING RATING:	10 KAIC	MAIN LUG RATING:	1000
		MAIN BREAKER RATING:	800

POLE NO.	C.B. TRIP	C.B. POLES	CIRCUIT SERVED	WIRE SIZE	Load Category	LOAD VA	A	B	C	LOAD VA	Load Category	WIRE SIZE	CIRCUIT SERVED	C.B. POLES	C.B. TRIP	POLE NO.
1					P	4698	8278			3580	M					2
3	100	3	LP3	1	P	4698		8278		3580	M	6	RTU-1	3	50	4
5					P	4698			8278	3580	M					6
7					P	3773	7873			4100	M					8
9	200	3	PP6	3/0	P	3773		7873		4100	M	4	RTU-2	3	60	10
11					P	3773			7873	4100	M					12
13					P	1980	6080			4100	M					14
15	200	3	PP7	3/0	P	1980		6080		4100	M	4	RTU-3	3	60	16
17					P	1980			6080	4100	M					18
19					M	9732	19464			9732	M					20
21	125	3	RTU-7	1/0	M	9732		19464		9732	M	1/0	RTU-4	3	125	22
23					M	9732			19464	9732	M					24
25					M	14520	24252			9732	M					26
27	175	3	RTU-8	2/0	M	14520		24252		9732	M	1/0	RTU-5	3	120	28
29					M	14520			24252	9732	M					30
31	20	1	SPARE	12			9732			9732	M					32
33	20	1	SPARE	12				9732		9732	M	1/0	RTU-6	3	115	34
35	20	1	SPARE	12					9732	9732	M					36
37	20	1	SPARE	12			0					12	SPARE	1	20	38
39	20	1	SPARE	12				0				12	SPARE	1	20	40
41	20	1	SPARE	12					0			12	SPARE	1	20	42

TOTAL KVA PER PHASE:	75.68	75.68	75.68	RECEPT (R)	100%	0		0	100%	(C) CONT
TOTAL CONNECTED KVA:	227.04			LIGHT (L)	100%	0		0	100%	(NC)NONCONT
				MOTOR(M)	102%	199	DEMAND CACLS (KVA)	0	100%	(K)KITCHEN
TOTAL DEMAND:	230.67			HEAT(H)	100%	0		0	100%	(WR) WELD
DEMAND AMPS:	640.7			PANELS (P)	100%	31.4				

PANEL: LP3

VOLTAGE: 120 /208V
PHASES: 3
WIRES: 4
GROUND: INSULATED

MINIMUM INTERRUPTING RATING:	10 KAIC	MAIN LUG RATING:	200A

POLE NO.	C.B. TRIP	C.B. POLES	CIRCUIT SERVED	WIRE SIZE	Load Category	LOAD VA	A	B	C	LOAD VA	Load Category	WIRE SIZE	CIRCUIT SERVED	C.B. POLES	C.B. TRIP	POLE NO.
1	20	1	PORCH LGT	12	L	152	988			836	L	12	MULTI PURP RM R-HALL LGT	1	20	2
3	20	1	LGT RMS 101-104	12	L	366		1202		836	L	12	MULTI PURP RM L-HALL LGT	1	20	4
5	20	1	CORRIDOR LGTS RM 111	12	L	532			1748	1216	L	12	MULTI PURP RM R-RM LGTS	1	20	6
7	20	1	RMS 105 & 106	12	L	200	1416			1216	L	12	MULTI PURP RM L-RM LGTS	1	20	8
9	20	1	LOBBY LTG RM 100, CORRIDOR 107	12	L	1558		2026		468	L	12	LGT RMS 112-114	1	20	10
11	20	1	LTG RMS 109-110 M/ELECT, STOR.	12	L	184			716	532	L	12	EMR BLDG LGT	1	20	12
13	20	1	FUTURE LIGHT	12	L	500	1460			960	L	12	PENDANT LIGHTS	1	20	14
15	20	1	SPARE	12				960		960	L	12	PENDANT LIGHTS	1	20	16
17	20	1	SPARE	12					460	460	L	12	WALL SCONCE	1	20	18
19	20	1	SPARE	12			300			300	L	12	WALL PACS	1	20	20
21	20	1	SPARE	12				0				12	SPARE	1	20	22
23	20	1	SPARE	12					0			12	SPARE	1	20	24
25	20	1	SPARE	12			0					12	SPARE	1	20	26
27	20	1	SPARE	12				0				12	SPARE	1	20	28
29	20	1	SPARE	12					0			12	SPARE	1	20	30
31	20	1	SPARE	12			0					12	SPARE	1	20	32
33	20	1	SPARE	12				0				12	SPARE	1	20	34
35	20	1	SPARE	12					0			12	SPARE	1	20	36
37	20	1	SPARE	12			0					12	SPARE	1	20	38
39	20	1	SPARE	12				0				12	SPARE	1	20	40
41	20	1	SPARE	12					0			12	SPARE	1	20	42

TOTAL KVA PER PHASE:	4.164	4.188	2.924	RECEPT (R)	100%	0		0	100%	(C) CONT
TOTAL CONNECTED KVA:	11.28			LIGHT (L)	125%	14.1		0	100%	(NC)NONCONT
				MOTOR(M)	100%	0	DEMAND CACLS (KVA)	0	100%	(K)KITCHEN
TOTAL DEMAND:	14.10			HEAT(H)	100%	0		0	100%	(WR) WELD
DEMAND AMPS:	39.2			PANELS (P)	100%	0				

PANEL: PP6

VOLTAGE: 120 /208V
PHASES: 3
WIRES: 4
GROUND: INSULATED

MINIMUM INTERRUPTING RATING:	10 KAIC	MAIN LUG RATING:	200A

POLE NO.	C.B. TRIP	C.B. POLES	CIRCUIT SERVED	WIRE SIZE	Load Category	LOAD VA	A	B	C	LOAD VA	Load Category	WIRE SIZE	CIRCUIT SERVED	C.B. POLES	C.B. TRIP	POLE NO.
1	20	1	PWR RM 101-102 JANITOR	12	R	540	1080			540	R	12	PWR RM 103-104 STORAGE	1	20	2
3	20	1	LOBBY RM 100 PWR	12	R	360		720		360	R	12	LOBBY RM 100 PWR	1	20	4
5	20	1	LOBBY RM 100 PWR	12	R	360			720	360	R	12	LOBBY RM 100 PWR	1	20	6
7	20	1	LOBBY RM 100 PWR	12	R	180	360			180	R	12	LOBBY RM 100 PWR	1	20	8
9	20	1	LOBBY RM 100 PWR	12	R	180		360		180	R	12	LOBBY RM 100 PWR	1	20	10
11	20	1	LOBBY RM 100 PWR	12	R	360			540	180	R	12	LOBBY RM 100 PWR	1	20	12
13	20	1	LOBBY RM 100 PWR	12	R	180	680			500	R	12	OFFICE 106 PWR	1	20	14
15	20	1	CORRIDOR 111 PWR	12	R	720		1260		540	R	12	CORRIDOR 107 PWR	1	20	16
17	20	1	STOR 112 MECH/E RM 113 PWR	12	R	720			1260	540	R	12	STOR RM 109 MECH/E 110 PWR	1	20	18
19	20	1	CATERING 114 PWR	12	R	180	900			720	R	12	RECPTS AT RTUS	1	20	20
21	20	1	CATERING 114 PWR	12	R	180		900		720	R	12	RECPTS AT RTUS	1	20	22
23	20	1	CATERING 114 PWR	12	R	180			680	500	P	12	CONTROLLER 1	1	20	24
25	20	1	CATERING 114 PWR	12	R	180	680			500	P	12	CONTROLLER 2	1	20	26
27	20	1	CATERING 114 PWR	12	R	180		680		500	P	12	CONTROLLER 3	1	20	28
29	20	1	SPARE	12					500	500	P	12	CONTROLLER 4	1	20	30
31	20	1	SPARE	12			0					12	SPARE	1	20	32
33	20	1	SPARE	12				0				12	SPARE	1	20	34
35	20	1	SPARE	12					0			12	SPARE	1	20	36
37	20	1	SPARE	12			0					12	SPARE	1	20	38
39	20	1	SPARE	12				0				12	SPARE	1	20	40
41	20	1	SPARE	12					0			12	SPARE	1	20	42

TOTAL KVA PER PHASE:	3.7	3.92	3.7	RECEPT (R)	100%	9.32		0	100%	(C) CONT
TOTAL CONNECTED KVA:	11.32			LIGHT (L)	100%	0		0	100%	(NC)NONCONT
				MOTOR(M)	100%	0	DEMAND CACLS (KVA)	0	100%	(K)KITCHEN
TOTAL DEMAND:	11.32			HEAT(H)	100%	0		0	100%	(WR) WELD
DEMAND AMPS:	31.4			PANELS (P)	100%	2				

PANEL: PP7

VOLTAGE: 120 /208V
PHASES: 3
WIRES: 4
GROUND: INSULATED

MINIMUM INTERRUPTING RATING:	10 KAIC	MAIN LUG RATING:	200A

POLE NO.	C.B. TRIP	C.B. POLES	CIRCUIT SERVED	WIRE SIZE	Load Category	LOAD VA	A	B	C	LOAD VA	Load Category	WIRE SIZE	CIRCUIT SERVED	C.B. POLES	C.B. TRIP	POLE NO.
1	20	1	MULTI-P RM 108	12	R	180	540			360	R	12	MULTI-P RM 108	1	20	2
3	20	1	MULTI-P RM 108	12	R	360		540		180	R	12	MULTI-P RM 108	1	20	4
5	20	1	MULTI-P RM 108	12	R	180			360	180	R	12	MULTI-P RM 108 FL BOX	1	20	6
7	20	1	MULTI-P RM 108 FL BOX	12	R	360	720			360	R	12	MULTI-P RM 108	1	20	8
9	20	1	MULTI-P RM 108	12	R	360		720		360	R	12	MULTI-P RM 108	1	20	10
11	20	1	MULTI-P RM 108	12	R	180			360	180	R	12	MULTI-P RM 108 FL BOX	1	20	12
13	20	1	MULTI-P RM 108	12	R	360	540			180	R	12	MULTI-P RM 108 PROJECTOR	1	20	14
15	20	1	MULTI-P RM 108 FL BOX	12	R	180		720		540	R	12	MULTI-P RM 108	1	20	16
17	20	1	MULTI-P RM 108 PROJECTOR	12	R	180			360	180	R	12	MULTI-P RM 108	1	20	18
19	20	1	MULTI-P RM 108	12	R	540	720			180	R	12	MULTI-P RM 108	1	20	20
21	20	1	SPARE	12				180		180	R	12	MULTI-P RM 108	1	20	22
23	20	1	SPARE	12					180	180	R	12	MULTI-P RM 108	1	20	24
25	20	1	SPARE	12			0					12	SPARE	1	20	26
27	20	1	SPARE	12				0				12	SPARE	1	20	28
29	20	1	SPARE	12					0			12	SPARE	1	20	30
31	20	1	SPARE	12			0					12	SPARE	1	20	32
33	20	1	SPARE	12				0				12	SPARE	1	20	34
35	20	1	SPARE	12					0			12	SPARE	1	20	36
37	20	1	SPARE	12			0					12	SPARE	1	20	38
39	20	1	SPARE	12				0				12	SPARE	1	20	40
41	20	1	SPARE	12					0			12	SPARE	1	20	42

TOTAL KVA PER PHASE:	2.52	2.16	1.26	RECEPT (R)	100%	5.94		0	100%	(C) CONT
TOTAL CONNECTED KVA:	5.94			LIGHT (L)	100%	0		0	100%	(NC)NONCONT
				MOTOR(M)	100%	0	DEMAND CACLS (KVA)	0	100%	(K)KITCHEN
TOTAL DEMAND:	5.94			HEAT(H)	100%	0		0	100%	(WR) WELD
DEMAND AMPS:	16.5			PANELS (P)	100%	0				

STATE OF KENTUCKY
CHARLES MATTHEW ELB
15300
LICENSED PROFESSIONAL ENGINEER

TECHNICAL HORIZONS
Industrial • Commercial • Institutional
501 Darby Creek Drive, Ste. 31, Lexington, KY
859.254.5563

BUILDING ADDITION TO THE CORBIN CENTER
CORBIN, KENTUCKY

REVISION | DATE | BY

DESIGN DOCUMENTS
The design professional serves only and all responsibility and liability for problems which arise from failure to follow the plans, specifications and the design intent they convey.

PROJECT NO. 4153-00
DESIGNED BY: E./AM
DRAWN BY: A./JF
CHECKED BY: MM
REVIEWED BY:
DATE: December 2024
SCALE: As Noted

MSE Engineers Architects Planners OF KENTUCKY, INC.
624 Wellington Way
Lexington, KY 40503
www.msekentucky.com
Phone: (859)223-5694
Fax: (859)223-2607

DRAWING NO.
E-7

SHEET OF

FIRE PROTECTION TAGGED NOTES:

1. CONNECT TO EXISTING 2.5" FIRE MAIN, AND THEN IMMEDIATELY PROVIDE A 3" INCREASER TO FEED NEW MAIN SERVING ADDITION.
2. 3" RISER UP IN CHASE TO ABOVE THE HIGH CEILING TO SERVE THE MULTIPURPOSE AREAS.
3. FIRE SUPPRESSION CONTRACTOR TO ROUTE NEW 3" FIRE MAIN ABOVE THE EXISTING LAY-IN CEILING. REPAIR/REPLACE ALL DAMAGED CEILING TILES, AND T-BARS. CONTRACTOR TO COORDINATE A PATH THROUGH THE EXISTING ABOVE CEILING VOID OR IN STRUCTURE TO NOT CONFLICT WITH EXISTING SYSTEMS. PROVIDE OFFSETS AS NECESSARY.
4. CONNECT NEW PIPING TO EXISTING AUXILIARY DRAIN, AND PIPE TO NEW EXTERIOR WALL.
5. DROP AUXILIARY DRAIN TO SPILL TO GRADE AT 8" AFG.
6. LOCATION OF WHERE AN AUXILIARY DRAIN MAY BE LOCATED; SPILL TO MOP SINK.
7. LOCATION OF A POTENTIAL AUXILIARY DRAIN, IF NEEDED.

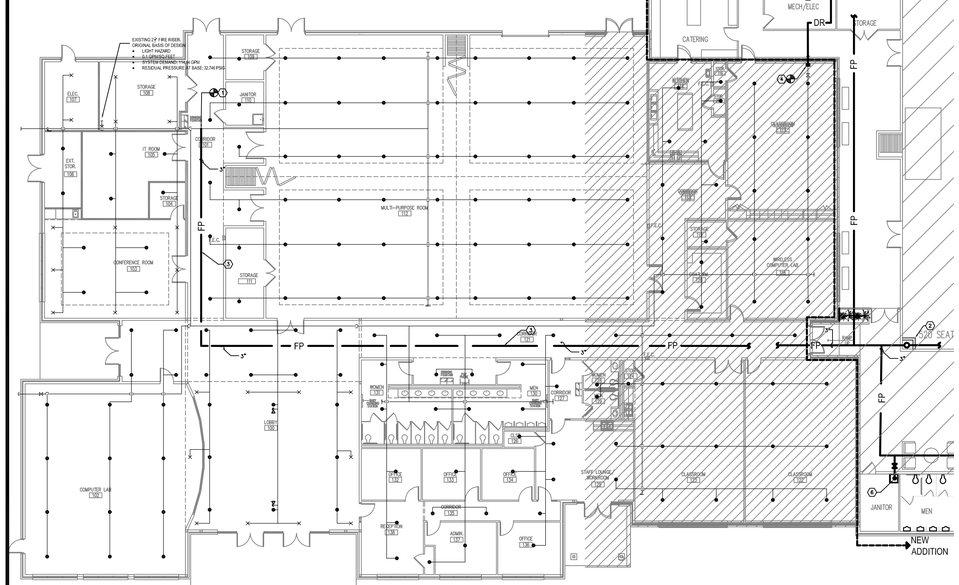

EXISTING FLOOR PLAN - FIRE SUPPRESSION

SCALE: 1/16" = 1' - 0"

2 FP-1

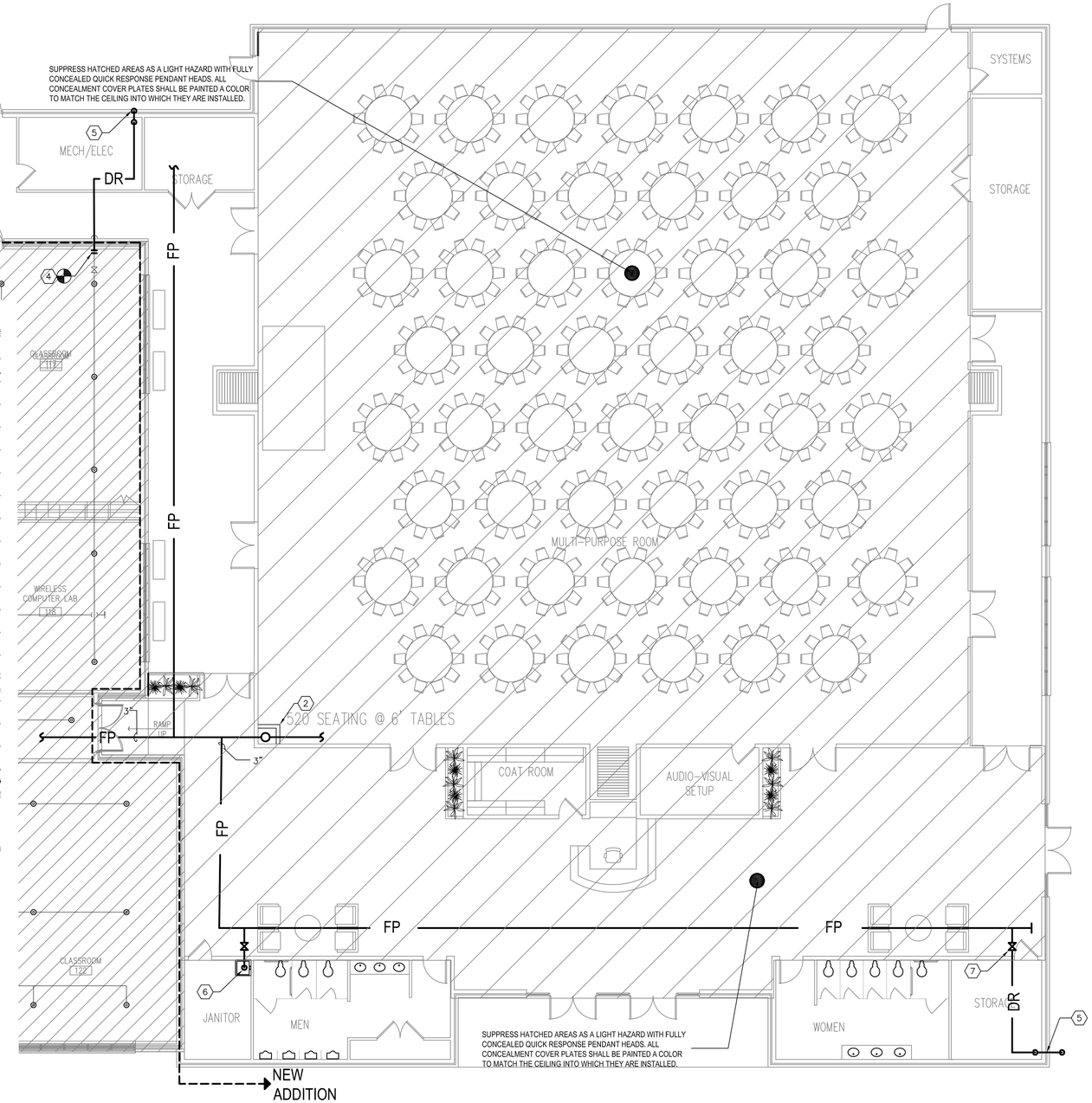

FLOOR PLAN - FIRE SUPPRESSION

SCALE: 1/8" = 1' - 0"

1 FP-1

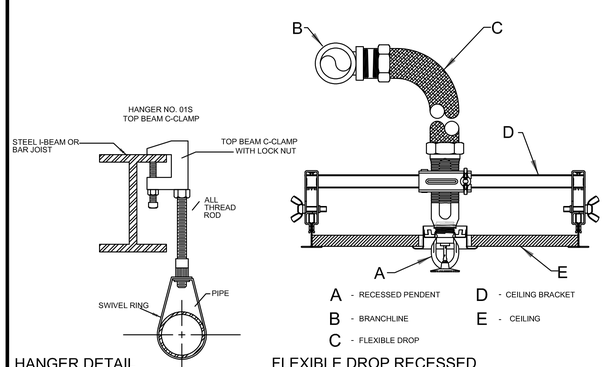

A - RECESSED PENDENT
B - BRANCHLINE
C - FLEXIBLE DROP
D - CEILING BRACKET
E - CEILING

HANGER DETAIL

SCALE: NONE

FLEXIBLE DROP RECESSED

SCALE: NONE

GENERAL FIRE PROTECTION NOTES:

1. BUILDING SHALL BE PROTECTED 100% BY A WET PIPE FIRE SUPPRESSION SYSTEM DESIGNED AND INSTALLED IN ACCORDANCE WITH NFPA-13, THE KENTUCKY BUILDING CODE AND THE PROJECT SPECIFICATIONS.
2. SUPPRESS NEW AREAS FROM EXISTING WET PIPE SUPPRESSION SYSTEM.
3. WHERE HEADS ARE INSTALLED INTO LAY-IN CEILINGS, INSTALL HEADS IN CENTER OF 2'x2' TILES, AND CENTERED IN THE ¼" POINTS OF 2'x4' TILES INSTALL ALL SPRINKLER HEADS ON SWING ARE NIPPLES.
4. ALL PIPING TO INDIVIDUAL SPRINKLER HEADS, REGARDLESS OF TYPE OF HEAD SHALL BE 1", UNLESS OTHERWISE NOTED.
5. PIPING IN ROOMS WITH SUSPENDED CEILINGS SHALL BE ABOVE CEILING UNLESS OTHERWISE NOTED.
6. LOCATIONS OF PIPING AND EQUIPMENT ARE APPROXIMATE AND SUBJECT TO ADJUSTMENTS IN THE FIELD. DO NOT SCALE THE DRAWINGS.
7. COORDINATE WITH HVAC, PLUMBING, AND ELECTRICAL EQUIPMENT TO AVOID INTERFERENCE WITH PIPING, DUCTS, AND CONDUIT.
8. SEAL AIRTIGHT AROUND ALL PIPING PENETRATIONS THROUGH WALLS, FLOOR AND ROOF. FIRE STOP PROPERLY WHERE REQUIRED BY CODE.
9. PROVIDE DRAINS AT LOW POINTS PER NFPA-13.
10. USE MANUFACTURED FITTINGS OR MECHANICAL TEES, ELLS, ETC. (SEE SPECIFICATIONS).
11. PITCH ALL SPRINKLER PIPING TO DRAIN TO MAINS. IF PIPING CANNOT BE PITCHED TO MAINS, PROVIDE AUXILIARY DRAINS AT LOW POINTS.
12. REFER TO ARCHITECTURAL AND ELECTRICAL DRAWINGS FOR EXACT LOCATION OF CEILINGS, CEILING TYPES AND LIGHT FIXTURES.
13. EXISTING BRANCH SPRINKLER LINES SHALL BE RELOCATED AND/OR REMOVED TO MEET COVERAGE REQUIREMENTS FOR THE AREA OF CONSTRUCTION. PROVIDE OFFSETS IN BRANCH LINES AS REQUIRED TO AVOID EXISTING AND NEW HVAC, PLUMBING AND ELECTRICAL SYSTEMS.

RECENT FLOW DATA FOR EXISTING RISER VALIDATION

STATIC PSI: 90 PSIG
RESIDUAL PSI: 36 PSIG
FLOW: 840 GPM
DATE OF TEST: 11/09/2023

IF CONTRACTOR NEEDS MORE UPDATED FLOW TEST FOR FOR HYDRAULIC CALCULATIONS, THEY SHALL INCLUDE COST IN THEIR BID

SPRINKLER DESIGN REQUIREMENTS:

HAZARD: LIGHT
APPROX. GPM REQUIRED: 131 GPM
PRESSURE REQUIRED FROM EXISTING RISER BASE: 28.8 PSIG

IF CONTRACTOR TAKES HYDRAULIC CALCULATIONS TO OUTSIDE OF BUILDING, THEN CALCULATIONS TO INCLUDE A 100 GPM HOSE STREAM ALLOWANCE

NOTE: ALL AREAS TO BE SUPPRESSED AS A LIGHT HAZARD OCCUPANCY WITH CHROME PLATED SEMI-RECESSED PENDANT HEADS, UNLESS OTHERWISE NOTED WITH HATCHING. ALL HEADS TO BE QUICK RESPONSE.

STATE OF KENTUCKY
CHARLES MATTHEW FULLER
16390
LICENSED PROFESSIONAL ENGINEER

TECHNICAL HORIZONS
Industrial • Commercial • Institutional
501 Darby Creek, Ste. 31, Lexington, KY
859.254.5863

BUILDING ADDITION TO THE CORBIN CENTER
CORBIN, KENTUCKY

DATE | REVISION

DESIGN DOCUMENTS:
The design professional waives any and all responsibility and liability for problems which arise from failure to follow plans, specifications and the drawings which they convey.

PROJECT NO. 4157-40
DESIGNED BY RVS
DRAWN BY RVS
CHECKED BY CMF
REVIEWED BY CMF
DATE October 2024

MSE
Engineers
Architects
Planners
OF KENTUCKY, INC.
624 Wallington Way
Lexington, KY 40503
www.msekentucky.com
Phone: (859)223-5694
Fax: (859)223-2607

DRAWING NO.
FP-1
SHEET OF

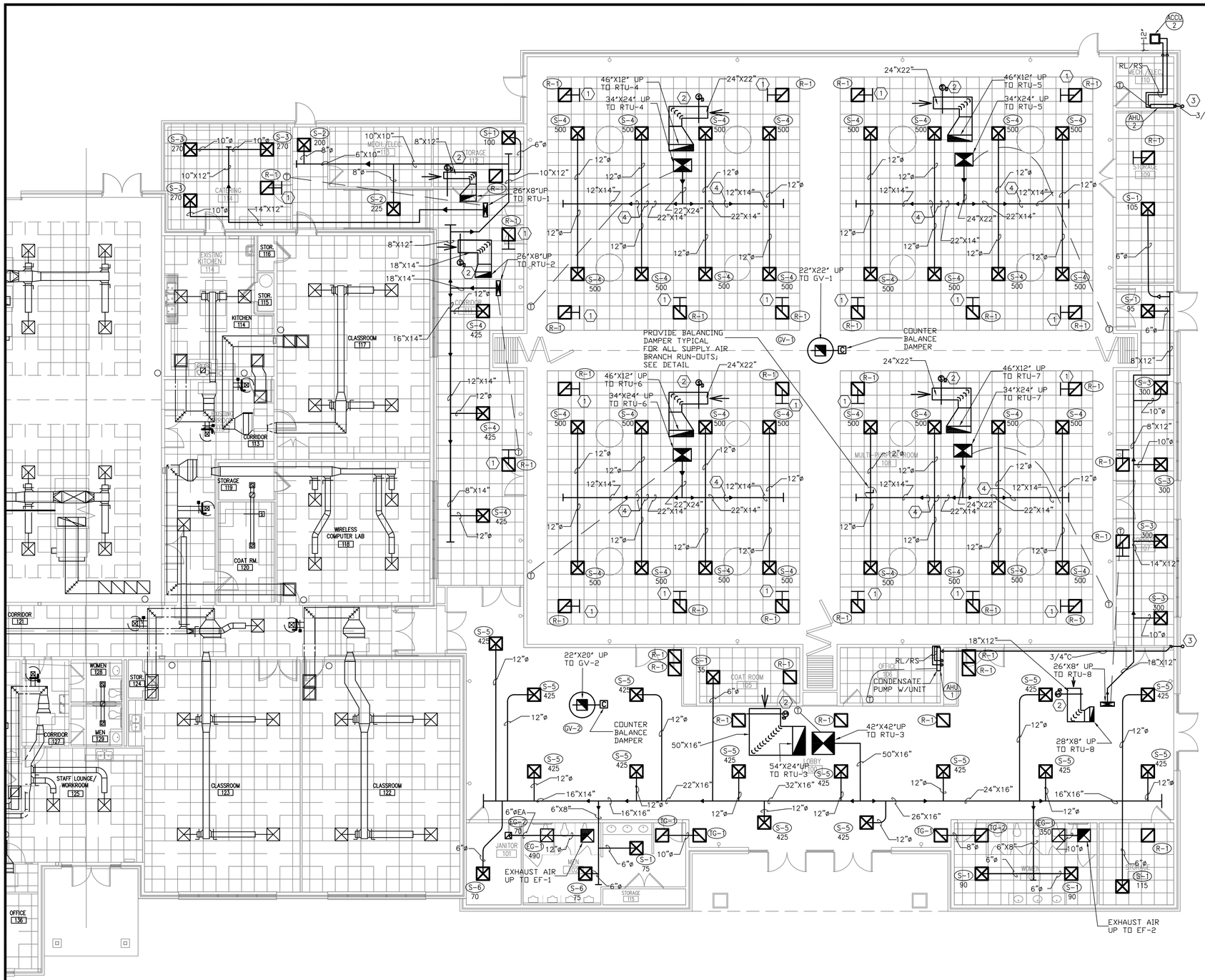

KEY NOTES:

1. R-1 WITH PLENUM BOOT, TYPICAL, SEE DETAIL
2. PROVIDE RETURNS WITH SMOKE INTAKE SHUTOFF DEVICE
3. SPILL CONDENSATE TO GRADE
4. RUN SUPPLY DUCT THROUGH TRUSS GIRDERS

1 CORBIN CENTER ADDITION HVAC PLAN

SCALE: 1/8" = 1'- 0"

STATE OF KENTUCKY
CHARLES MATTHEW ELLIS
15300
LICENSED
PROFESSIONAL ENGINEER

TECHNICAL HORIZONS
Industrial • Commercial • Institutional
501 Delroy Drive, Lexington, KY
859.263.5963

BUILDING ADDITION TO
THE CORBIN CENTER
CORBIN, KENTUCKY

REVISION	DATE

DESIGN DOCUMENTS:
The design professional waives any and all responsibility and liability for problems which arise from failure to follow the plans, specifications, and other contract documents.

COPYRIGHT ©
This document disclaiming subject matter considered confidential to MSE of Kentucky, Inc. and on which rights to reproduce the document or any part thereof, or to disclose any information contained therein to third parties, are reserved by MSE of Kentucky, Inc. Unauthorized use of this document is prohibited.

PROJECT NO.	4437-09
DESIGNED BY	CW/CME
DRAWN BY	CW
CHECKED BY	CME
REVIEWED BY	CME
DATE	[illegible]
SCALE	[illegible]

MSE OF KENTUCKY, INC.
Engineers
Architects
Planners
624 Wellington Way
Lexington, KY 40503
www.mseinc.com
Phone: (859)223-5934
Fax: (859)223-2607

DRAWING NO.

M—1

SHEET OF

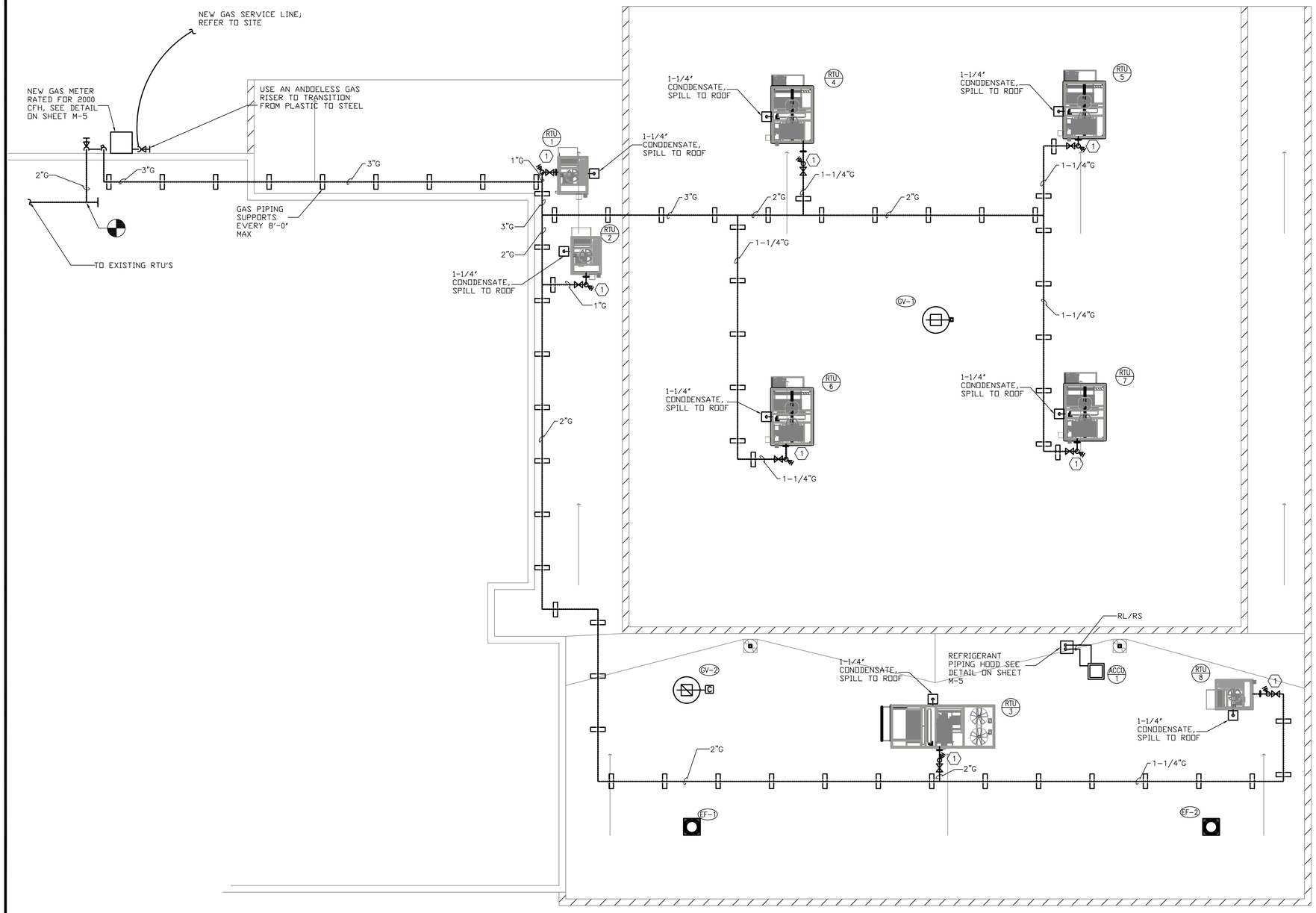

1 PARTIAL ROOF PLAN - RTU LAYOUT AND GAS PIPING

SCALE: 1/8" = 1'-0"

KEY NOTES:

1. GAS COCK, DIRTLEG, AND DIELECTRIC UNION, TYPICAL AT ALL RTU'S

STATE OF KENTUCKY
CHARLES MATTHEW ELLIS
15390
LICENSED PROFESSIONAL ENGINEER

TECHNICAL HORIZONS
Industrial • Commercial • Institutional
501 Delroy Drive, Lexington, KY
859.263.5963

BUILDING ADDITION TO
THE CORBIN CENTER
CORBIN, KENTUCKY

DATE	REVISION	BY

DESIGN DOCUMENTS
The design professional waives any and all responsibility and liability for problems which arise from failure to follow the plans, specifications, or other design intent of the design professional.

PROJECT NO. 453-00
DESIGNED BY CW/CME
DRAWN BY CW
CHECKED BY CME
REVIEWED BY
DATE October 2, 2008
SCALE AS NOTED

MSE OF KENTUCKY, INC.
Engineers
Architects
Planners
624 Wellington Way
Lexington, KY 40503
www.mseinc.com
Phone: (859)223-5694
Fax: (859)223-2607

DRAWING NO.
M-2

SHEET OF

MECHANICAL SYMBOLS

AFG	ABOVE FINISHED GRADE
FFE	FINISHED FLOOR ELEVATION
AFF	ABOVE FINISHED FLOOR
AD	ACCESS DOOR
TYP	TYPICAL
NTS	NOT TO SCALE
FC	FLEXIBLE CONNECTION
EF–#	EXHAUST FAN
EH–#	ELECTRIC HEATER
MAU–#	MAKEUP AIR UNIT
RTU–#	ROOF TOP UNIT
FD	FIRE DAMPER
SD	SUCTION DIFFUSER
	TAGGED NOTE
FD/SD	FIRE/SMOKE DAMPER
202	CARBON DIOXIDE SENSOR
CD	CONDENSATE DRAIN LINE
S–# / CFM	INDICATES AIR DISTRIBUTION DEVICE SPECIFICATION L = LOUVER T = TRANSFER GRILLE S = SUPPLY DIFFUSER OR REGISTER, R = RETURN GRILLE OR REGISTER, E = EXHAUST GRILLE OR REGISTER) CFM IF INDICATED ON DWG.
S20X12	SUPPLY AIR DUCT/DUCT DIM. 20" HORIZ. X 12" VERT. (ONE LINE)
R20X12	RETURN AIR DUCT (ONE LINE) 20" HORIZ. X 12" VERT. (ONE LINE)
E12X12	EXHAUST AIR DUCT (ONE LINE) 12" HORIZ. X 12" VERT. (ONE LINE)
	VOLUME DAMPER (MANUAL)
	BOWDEN VOLUME DAMPER
UL	U.L. LISTED PENETRATION
	SUPPLY, RETURN, EXHAUST GRILLE
T	THERMOSTAT OR REMOTE SENSOR
SD	DUCT MOUNTED SMOKE DETECTOR
RTU–#	MECHANICAL EQUIPMENT DESIGNATOR
= RS/RL =	SET OF REFRIGERANT LINES
	RETURN AIR BOOT, SEE DETAIL
	TRANSITION – RECT. TO ROUND
	TRANSITION – RECT. TO RECT. OR ROUND TO ROUND.

MECHANICAL GENERAL NOTES

1. EACH CONTRACTOR, PROPOSER, SUPPLIER AND/OR MANUFACTURER SHALL REFER TO ALL DOCUMENTS PERTAINING TO THIS PROJECT AND COORDINATE ACCORDINGLY SO AS TO ENSURE ADEQUACY OF FIT, COMPLIANCE WITH SPECIFICATIONS, PROPER VOLTAGE AND CURRENT CHARACTERISTICS TO AVOID CONFLICT WITH ANY OTHER BUILDINGS SYSTEMS.

2. ALL OFFSETS, TURNS, FITTINGS, TRIM–, DETAIL, ETC., MAY NOT BE INDICATED, BUT SHALL BE PROVIDED AS REQUIRED. ADDITIONAL ALLOWANCES SHALL BE INCLUDED FOR SAME IN EACH PROPOSERS BID.

3. INSTALL NO PIPING, CONDUITS, ETC., IN A LOCATION OR IN A MANNER WHICH WILL ALLOW FREEZING AND THE COLLECTION OF CONDENSATION THEREON.

4. OBSERVE ALL APPLICABLE CODES, RULES, AND REGULATIONS THAT MAY APPLY TO THE WORK UNDER THIS CONTRACT. (CITY, COUNCIL, LOCAL, FEDERAL, MUNICIPALITY, UTILITY COMPANY, OSHA, COMMONWEALTH OF KENTUCKY, ETC.)

5. UNLESS OTHERWISE SPECIFIED OR INDICATED, ALL EQUIPMENT AND/OR MATERIALS WITHIN OCCUPIED SPACES OR EXPOSED TO VIEW ON THE BUILDING EXTERIOR SHALL BE PRIMED AND FINISHED WITH COLOR AS CHOSEN BY ARCHITECT.

6. UNLESS OTHERWISE SPECIFIED OR INDICATED, INSTALL DIFFUSERS, REGISTERS, GRILLES, SMOKE DETECTORS AND OTHER CEILING MOUNTED APPURTENANCES IN A SYMMETRICAL PATTERN. UNLESS SPECIFICALLY INDICATED OTHERWISE, REFER TO THE ARCHITECT'S REFLECTED CEILING PLAN AS APPLICABLE.

7. ANY VIBRATING, OSCILLATING OR OTHER NOISE OR MOTION PRODUCING EQUIPMENT SHALL BE ISOLATED FROM SURROUNDING SYSTEMS IN AN APPROVED MANNER. NOISY OR STRUCTURALLY DAMAGING INSTALLATIONS SHALL BE SATISFACTORILY REPLACED OR REPAIRED AT THE INSTALLING CONTRACTORS' EXPENSE.

8. DEVIATIONS IN SIZES, CAPACITIES, FIT, FINISH, ETC., FOR EQUIPMENT FROM THAT PRIME SPECIFIED SHALL BE THE RESPONSIBILITY OF THE PURCHASER OF THAT EQUIPMENT. ANY PROVISIONS REQUIRED TO ACCOMODATE A DEVIATION, SHALL BE THE RESPONSIBILITY OF THE PURCHASER.

9. DO NOT SCALE FROM DRAWINGS, AS PRINTING DISTORTS SCALE. WORK SHALL BE LAID OUT FROM DIMENSIONED DRAWINGS, OR DIMENSIONS SUPPLIED TO THE CONTRACTOR.

10. ALL ELECTRICAL COMPONENTS OR EQUIPMENT SHALL BE LABELED BY UNDERWRITER'S LABORATORIES, OR OTHER APPROVED LISTING AGENCY.

11. ALL SUPPORT FOR EQUIPMENT, DEVICES OR FIXTURES SHALL BE UNIQUE, FROM THE BUILDING STRUCTURE. DO NOT SUPPORT WORK FROM OTHER TRADES OR EQUIPMENT. HOLD ALL ABOVE CEILING EQUIPMENT TIGHT TO STRUCTURAL SUPPORTING ROOF DECK.

12. WHERE INTERRUPTING AN EXISTING UTILITY OR SERVICE DELIBERATELY OR ACCIDENTALLY, THE RESPONSIBLE CONTRACTOR SHALL WORK CONTINUOUSLY AS NEEDED TO RESTORE SAME PROVIDING PREMIUM TIME AS NEEDED.

13. WHERE PENETRATING ROOFING MEMBRANE OR OTHER MATERIALS USED FOR WEATHERPROOFING THE BUILDING, MAKE SUCH PENETRATIONS IN A WAY THAT WILL NOT VOID OR DIMINISH THE ROOFING WARRANTY OR INTEGRITY IN ANYWAY. COORDINATE ALL SUCH PENETRATIONS WITH THE ROOFING MANUFACTURER.

14. CONTRACTOR TO PROVIDE TURNING VANES IN ALL MAIN DUCT 45\90 DEGREE TURNS. THIS APPLIES TO ALL S.A. & R.A. DUCTS.

19712 Corbin Center Addition - RTU SCHEDULE

TAG	Unit: Weight (lbs)	Model	MANUFACTURER	TONNAGE	OA REQS.	Electrical: Voltage	MCA (A)	MROPD (A)	Efficiency: EER	Supply Fan: Airflow (CFM)	ESP (inH2O)	Motor Size (HP)	Exhaust Fan: Airflow (CFM)	ESP (inH2O)	Cooling: Total Capacity	Sensible Capacity	Compressor: Qty	Refrigerant	Gas Heating: Size	Stages	Remarks
RTU-1	1090	DPSC03B	DAIKEN	3	90	208/60/3	34.3	50	13.68	810	0.6	0.5	-	-	32588	20782	1	R32	80 MBH	Modulating 5:1 Turndown	1,2,3,4,6,7,12
RTU-2	1190	DPSC05B	DAIKEN	5	80	208/60/3	39.8	60	12.51	1800	0.7	1.7	-	-	57210	42836	1	R32	80 MBH	Modulating 5:1 Turndown	1,2,3,4,5,6,7,12,18
RTU-3	2673	DPSC17B	DAIKEN	17	920	208/60/3	115.3	175	10.3	6500	1.3	5	6500	0.5	201760	153418	1	R32	300 MBH	Modulating 12:1 Turndown	1,2,3,4,5,6,7,9,12,16
RTU-4	3260	DPSC10B	DAIKEN	10	910	208/60/3	91.6	125	11.9	4000	1.3	6.1	5300	1.3	125648	119225	1	R32	200 MBH	Modulating 10:1 Turndown	1,2,3,4,5,6,7,8,9,10,11,12,13,14,15,16,17
RTU-5	3260	DPSC10B	DAIKEN	10	910	208/60/3	91.6	125	11.9	4000	1.3	6.1	5300	1.3	125648	119225	1	R32	200 MBH	Modulating 10:1 Turndown	1,2,3,4,5,6,7,8,9,10,11,12,13,14,15,16,17
RTU-6	3260	DPSC10B	DAIKEN	10	910	208/60/3	91.6	125	11.9	4000	1.3	6.1	5300	1.3	125648	119225	1	R32	200 MBH	Modulating 10:1 Turndown	1,2,3,4,5,6,7,8,9,10,11,12,13,14,15,16,17
RTU-7	3260	DPSC10B	DAIKEN	10	910	208/60/3	91.6	125	11.9	4000	1.3	6.1	5300	1.3	125648	119225	1	R32	200 MBH	Modulating 10:1 Turndown	1,2,3,4,5,6,7,8,9,10,11,12,13,14,15,16,17
RTU-8	1110	DPSC04B	DAIKEN	4	60	208/60/3	39.8	60	13.14	1400	0.7	1.7	-	-	47978	35064	1	R32	80 MBH	Modulating 5:1 Turndown	1,2,3,4,5,6,7,12,18

Remarks:

1. PROVIDE 14" ROOF CURB
2. PROVIDE UNIT POWERED 115V GFI OUTLET
3. PROVIDE A PHASE FAILURE MONITOR
4. PROVIDE BACnet MSTP COMMUNICATION CARD
5. PROVIDE ECONOMIZER WITH COMPARITIVE ENTHALPY CONTROL
6. PROVIDE SINGLE DISCONNECT FIELD CONNECTION
7. PROVIDE SPACE SENSOR WITH ADJUSTABLE SET POINT
8. PROVIDE SPACE SENSOR WITH ADJUSTABLE SET POINT, HUMIDITY, AND CO2 CONTROL
9. PROVIDE BUILDING STATIC PRESSURE SENSOR
10. PROVIDE SUPPLY LEAVING WHEEL TEMPERATURE SENSOR
11. PROVIDE EXHAUST LEAVING WHEEL TEMPERATURE SENSOR
12. INSTALL RETURN AIR DUCT SMOKE DETECTOR
13. PROVIDE ENERGY WHEEL AT 0.37 IN. PRESSURE DROP AT 910 CFM OUTSIDE AIR VOLUME
14. ENERGY WHEEL SUMMER OUTSIDE AIR CONDITIONS AT 92°F DB AND 74°F WB. SUMMER EFFECTIVENESS: 0.83 TOTAL AND 0.87 SENSIBLE
15. ENERGY WHEEL WINTER OUTSIDE AIR CONDITIONS AT 7°F DB AND 6°F WB. WINTER EFFECTIVENESS: 0.84 TOTAL AND 0.88 SENSIBLE
16. PROVIDE POWERED EXHAUST
17. PROVIDE WITH HOT GAS REHEAT AND ECM FAN MOTOR.
18. PROVIDE BAROMETRIC RELIEF

MINI–SPLIT AIR HANDLER

MARK	DAIKIN MODEL	SUPPLY FAN: CFM	TYPE	DRIVE	HP	F.L.A.	SEER	TOTAL COOLING (MBH)	SENSIBLE COOLING (MBH)	ELECTRICAL: MCA	MOP	VOLTS/ø	REMARKS
AHU–1	FTKF24AXVJU	716	WALL	––	––	––	21	26.4	16.4	––	––	208/1	1,2,3
AHU–2	FTKF24AXVJU	716	WALL	––	––	––	21	26.4	16.4	––	––	208/1	1,2,3

REMARKS:

1. AH UNIT FED BY POWER FROM CONDENSING HEAT PUMP UNIT.
2. FACTORY SINGLE STAGE HEATING/COOLING THERMOSTAT WITH ON–OFF–AUTO FAN SWITCH AND HEAT/COOL AUTO–CHANGEOVER.
3. PROVIDE WITH INTERNAL CONDENSATE PUMP ACCESSORY.

GRAVITY RELIEF HOOD SCHEDULE

MARK	MANUFACTURER	MODEL	LOCATION	SERVING	E.S.P.	THROAT AREA (SQ. FT.)	THROAT VELOCITY (FT/MIN.)	MAX CFM	WEIGHT (LBS)	REMARKS
GV–1	GREENHECK	GRSR–30	ROOF	MULTI–PURPOSE ROOM	0.11	5	753	3,790	35	1,2,3,4,5
GV–2	GREENHECK	GRSR–30	ROOF	LOBBY	0.08	5	646	3,250	35	1,2,3,4,5

REMARKS:

1. FURNISH WITH 20" TALL, UNINSULATED ROOF CURB
2. FURNISHED WITH BIRDSCREEN IN REMOVABLE FRAMES FOR INTAKE/EXHAUST
3. FURNISHED WITH CURB FOR MEMBRANE TYPE ROOF
4. RELIEF AIR HOOD TO BE POWERED OPEN DURING ECONOMIZER OPERATION, AND SPRING CLOSED WHEN IN NORMAL OPERATION.
5. GRAVITY OPERATED BACKDRAFT DAMPER.

MINI–SPLIT CONDENSING UNIT

MARK	DAIKEN MODEL	NOMINAL TONNAGE	SEER RATING	TOTAL COOLING (MBH)	ELECTRICAL: MCA	MOP	VOLTS/ø	REMARKS
ACCU–1	RKF24AXVJU	2	16	18	14.23	20	208/1	1,2,3,4,5
ACCU–2	RKF24AXVJU	2	16	18	14.23	20	208/1	1,2,3,4,5

REMARKS:

1. COOLING CAPACITY IS BASED ON 95°F AMBIENT AIR TEMP & RATED IN ACCORDANCE WITH D.O.E. TESTS & A.R.I. STANDARDS.
2. PROVIDE UNIT WITH SUCTION AND DISCHARGE SERVICE VALVES.
3. PROVIDE CRANKCASE HEATER, FILTER–DRIER, AND LOW PRESSURE SWITCH.
4. PROVIDE UNIT WITH THERMAL EXPANSION VALVES AND HARD START KITS.
5. 5 YEAR COMPRESSOR WARRANTY.

EXHAUST FANS

MARK	MODEL	VOLUME (CFM)	TOTAL EXTERNAL SP (IN WG)	FAN RPM	OPERATING POWER (HP)	WEIGHT (LB)	SIZE (HP)	V/C/P	ENCLOSURE	MOTOR RPM	WINDINGS	NEC FLA	REMARKS
EF-1	G-090-VG	560	0.33	1522	0.06	30	0.1	115/60/1	TN	1725	1	NA	1,2,3,4,5
EF-2	G-080-VG	350	0.258	1501	0.04	29	0.1	115/60/1	TN	1725	1	NA	1,2,3,4,5

REMARKS:

1. PROVIDE WITH APPROPRIATE BACK DRAFT DAMPER
2. PROVIDE STARTER AND DISCONNECT SWITCH
3. PROVIDE BIRDSCREEN AND #12 MESH INSECT SCREEN
4. PROVIDE NEOPRENE VIBRATION ISOLATORS
5. PROVIDE ROOF CURB

REGISTERS, GRILLES, AND DIFFUSERS

MARK	PRICE MODEL	TYPE	NOMINAL SIZE	MOUNTING	CFM MAX.	PD MAX.	THROW @ 100 FPS	OBD?	FINISH	NC MAX.	REMARKS
S–1	ASPD SERIES ALUMINUM	SQUARE PLAQUE DIFFUSER	24"x24" 6"ø NECK	LAY–IN	115	0.023	3'	YES	CHOSEN BY ARCHITECT	15	1,2,4
S–2	ASPD SERIES ALUMINUM	SQUARE PLAQUE DIFFUSER	24"x24" 8"ø NECK	LAY–IN	225	0.045	4'	YES	CHOSEN BY ARCHITECT	15	1,2,4
S–3	ASPD SERIES ALUMINUM	SQUARE PLAQUE DIFFUSER	24"x24" 10"ø NECK	LAY–IN	375	0.088	6'	YES	CHOSEN BY ARCHITECT	18	1,2,4
S–4	ASPD SERIES ALUMINUM	SQUARE PLAQUE DIFFUSER	24"x24" 12"ø NECK	LAY–IN	550	0.127	7'	YES	CHOSEN BY ARCHITECT	21	1,2,4
S–5	ASPD SERIES ALUMINUM	SQUARE PLAQUE DIFFUSER	24"x24" 12"ø NECK	SURFACE MOUNT	550	0.127	7'	YES	CHOSEN BY ARCHITECT	21	1,2,4
S–6	ASPD SERIES ALUMINUM	SQUARE PLAQUE DIFFUSER	24"x24" 12"ø NECK	SURFACE MOUNT	115	0.023	3'	YES	CHOSEN BY ARCHITECT	15	1,2,4
R–1	SERIES 70 ALUMINUM	RETURN GRILLE	24"x24"	LAY–IN	800	0.02	–	–	CHOSEN BY ARCHITECT	20	2,3
TG–1	SERIES 70 ALUMINUM	LOUVER FACED TRANSFER GRILLE	24"x24"	SURFACE MOUNT	720	0.014	–	–	CHOSEN BY ARCHITECT	20	1,2
TG–2	SERIES 70 ALUMINUM	LOUVER FACED TRANSFER GRILLE	24"x24"	LAY–IN	720	0.014	–	–	CHOSEN BY ARCHITECT	20	1,2
EG–1	SERIES 70 ALUMINUM	LOUVER FACED TRANSFER GRILLE	24"x24"	LAY–IN	720	0.014	–	–	CHOSEN BY ARCHITECT	20	1,2,4
EG–2	SERIES 70 ALUMINUM	LOUVER FACED EXHAUST GRILLE	12"X12"	LAY–IN	180	0.032	–	–	CHOSEN BY ARCHITECT	20	1,2,4

REMARKS:

1. PROVIDE DUCT TRANSITION TO GRILLE/DIFFUSER AS REQUIRED.
2. IF ARCHITECT DOES NOT CHOOSE A COLOR, THEN COLOR SHALL BE OFF–WHITE OR AS INDICATED ON PLANS.
3. PROVIDE PLENUM BOX, FULL SIZE OF AIR DEVICE, 12" DEEP, DUCT TO TAP INTO SIDE. WHERE THE INSIDE OF PLENUM BOXES ARE VISIBLE FROM THE FLOOR, THEY SHALL BE PAINTED FLAT BLACK. SEE RETURN PLENUM DETAIL.
4. PROVIDE MANUFACTURERS INTEGRAL BALANCING DAMPER IN DEVICE TO ALLOW BALANCING OF AIR DEVICE THROUGH FACE OF DEVICE.

1 MECHANICAL SCHEDULES
SCALE: NTS

STATE OF KENTUCKY
CHARLES MATTHEW ELLIS
15300
LICENSED PROFESSIONAL ENGINEER

TECHNICAL HORIZONS
Industrial • Commercial • Institutional
501 Delroy Drive, Lexington, KY
859.263.5863

BUILDING ADDITION TO
THE CORBIN CENTER
CORBIN, KENTUCKY

REVISION	DATE	BY

DESIGN DOCUMENTS
The design professional wavers any and all responsibility and liability for problems which arise from failure to follow the intent of the design documents.

PROJECT NO. 4157-00
DESIGNED BY OW/CME
DRAWN BY OW
CHECKED BY CME
REVIEWED BY
DATE
SCALE

MSE OF KENTUCKY, INC.
Engineers
Architects
Planners
624 Wellington Way
Lexington, KY 40503
www.mseky.com
Phone: 859)223-5684
Fax: (859)223-2607

DRAWING NO.
M–3
SHEET OF

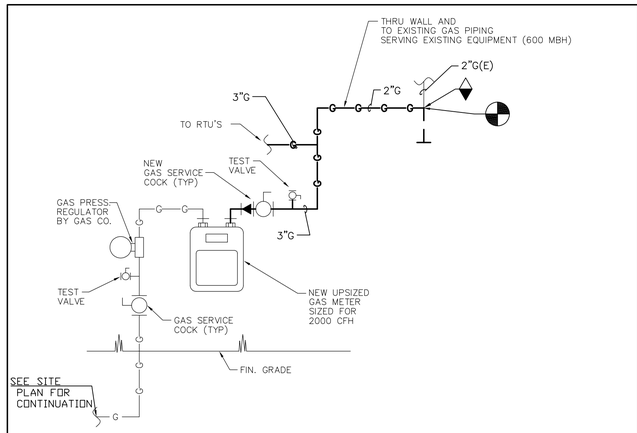

GAS METER DETAIL

NOT TO SCALE

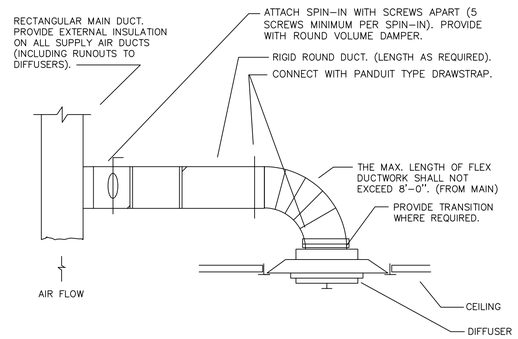

TYPICAL ROUND SUPPLY AIR BRANCH DUCT DETAIL

NTS

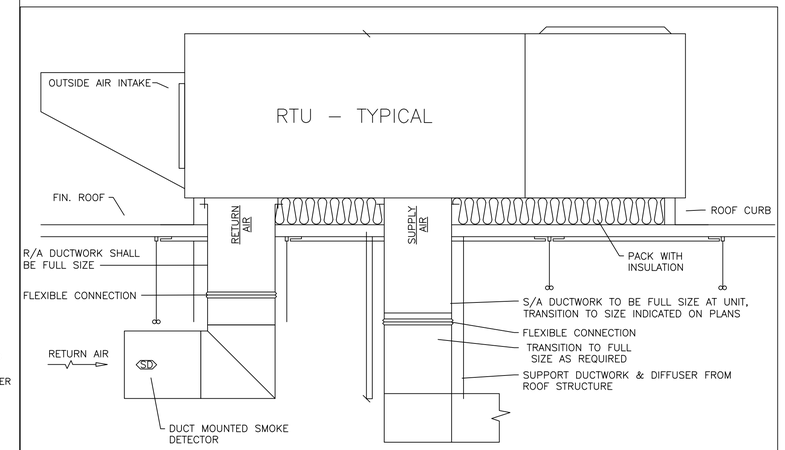

ROOF TOP UNIT DETAIL

NO SCALE

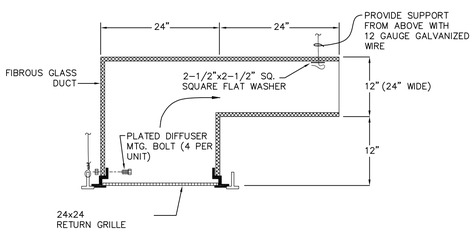

RETURN/TRANSFER AIR BOOT DETAIL

NO SCALE

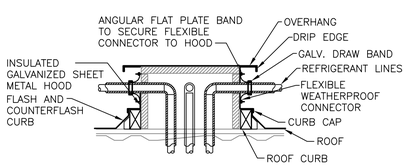

REFRIGERATION PIPING CURB

NO SCALE

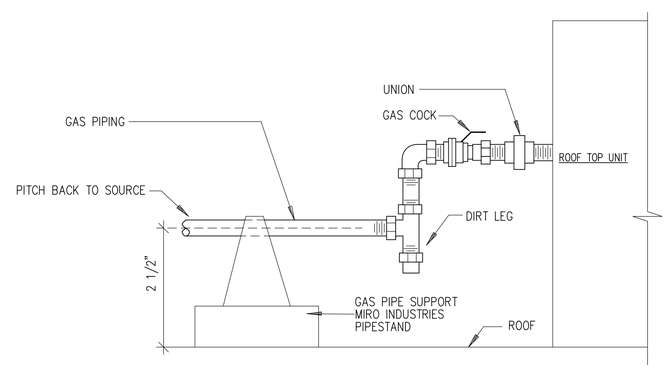

ROOF EQUIP. GAS CONN. DETAIL

N.T.S.

1 MECHANICAL DETAILS

NTS

STATE OF KENTUCKY
CHARLES MATTHEW ELLIS
15300
LICENSED PROFESSIONAL ENGINEER

TECHNICAL HORIZONS
Industrial • Commercial • Institutional
501 Delany Ave. Lawrenceburg, KY
859.263.5863

BUILDING ADDITION
TO
THE CORBIN CENTER
CORBIN, KENTUCKY

DATE	REVISION	BY

DESIGN DOCUMENTS:
The design professional waives any and all responsibility and liability for problems which arise from failure to follow the plans, specifications and other design criteria herein.

PROJECT NO. 4057-0
DESIGNED BY CJE / CNY / JF
DRAWN BY CNY / JF
CHECKED BY CJE
REVIEWED BY
DATE [illegible]
SCALE AS NOTED

MSE OF KENTUCKY, INC.
Engineers
Architects
Planners
624 Wellington Way
Lexington, KY 40503
www.mseky.com
Phone: (859)223-5694
Fax: (859)223-2807

DRAWING NO.
M – 4
SHEET OF

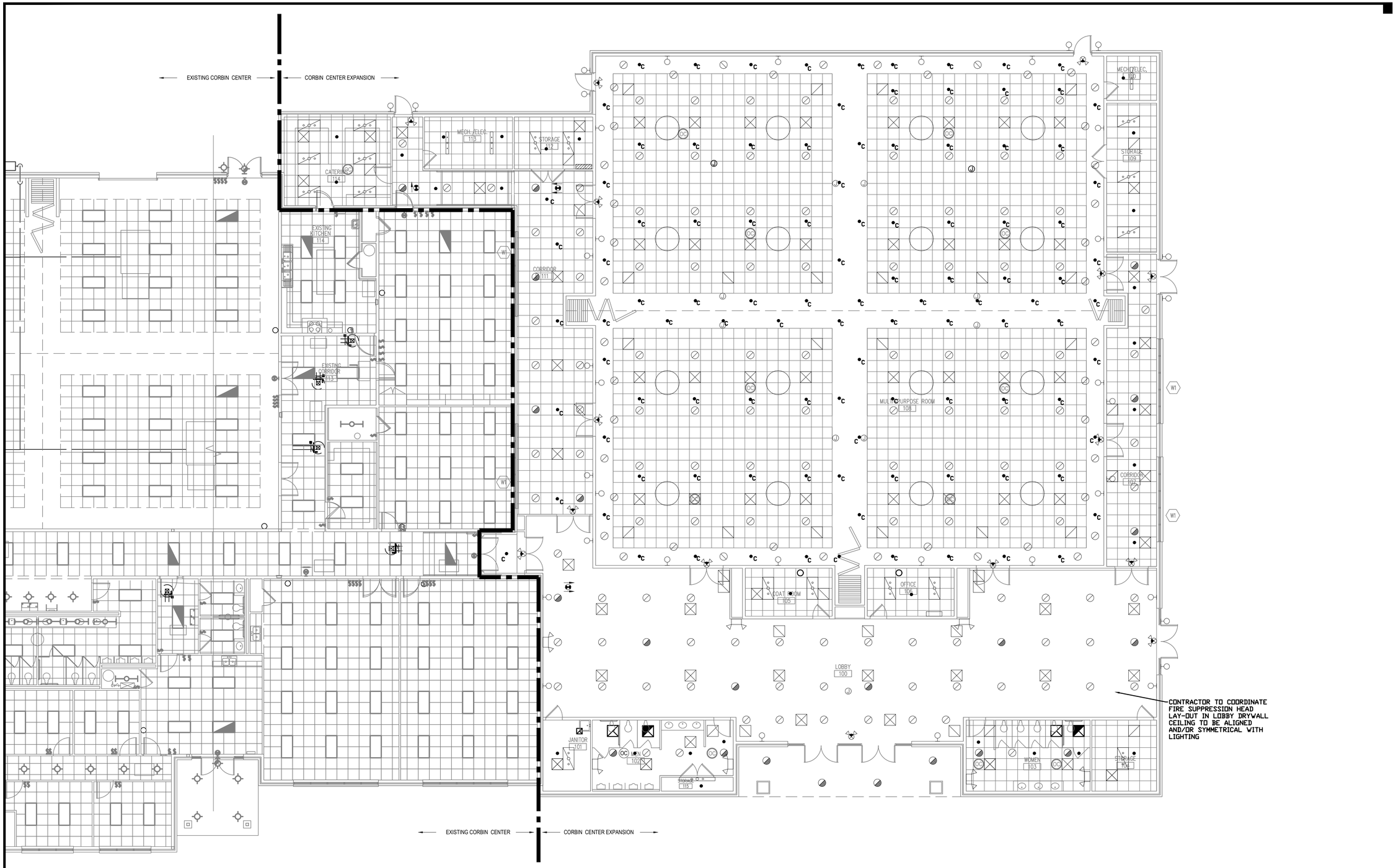

1 CEILING COORDINATION PLAN

SCALE: 1/8" = 1'-0"

STATE OF KENTUCKY
CHARLES MATTHEW ELLIS
16300
LICENSED PROFESSIONAL ENGINEER

TECHNICAL HORIZONS
Industrial • Commercial • Institutional
501 Darby Creek Rd., Lexington, KY
859-254-3663

BUILDING ADDITION TO
THE CORBIN CENTER
CORBIN, KENTUCKY

REVISION	DATE	BY

DESIGN DOCUMENTS
The design professional waives any and all responsibility and liability for problems which arise from failure to follow the plans, specifications and the design intent thereof.

PROJECT NO.	4157-00
DESIGNED BY	CME/OW/JF
DRAWN BY	OW/JF
CHECKED BY	CME
REVIEWED BY	
DATE	October 2, 2009
SCALE	1/8" = 1'-0"

KSE OF KENTUCKY, INC.
Engineers
Architects
Planners
624 Wellington Way
Lexington, KY 40503
www.kseinc.com
Phone: (859)223-5684
Fax: (859)223-2607

DRAWING NO.

MEP1

SHEET OF

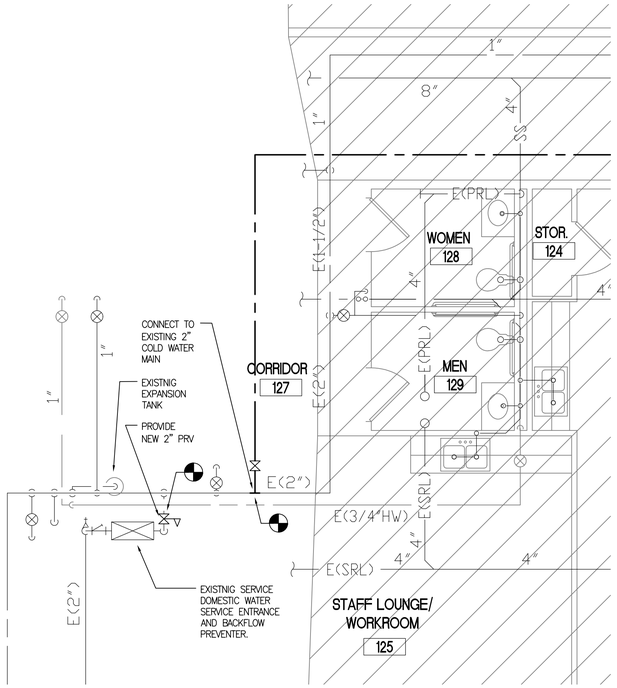

EXISTING AREA ENLARGED PLUMBING PLAN (1 / P-1)

SCALE: 1/4" = 1' - 0"

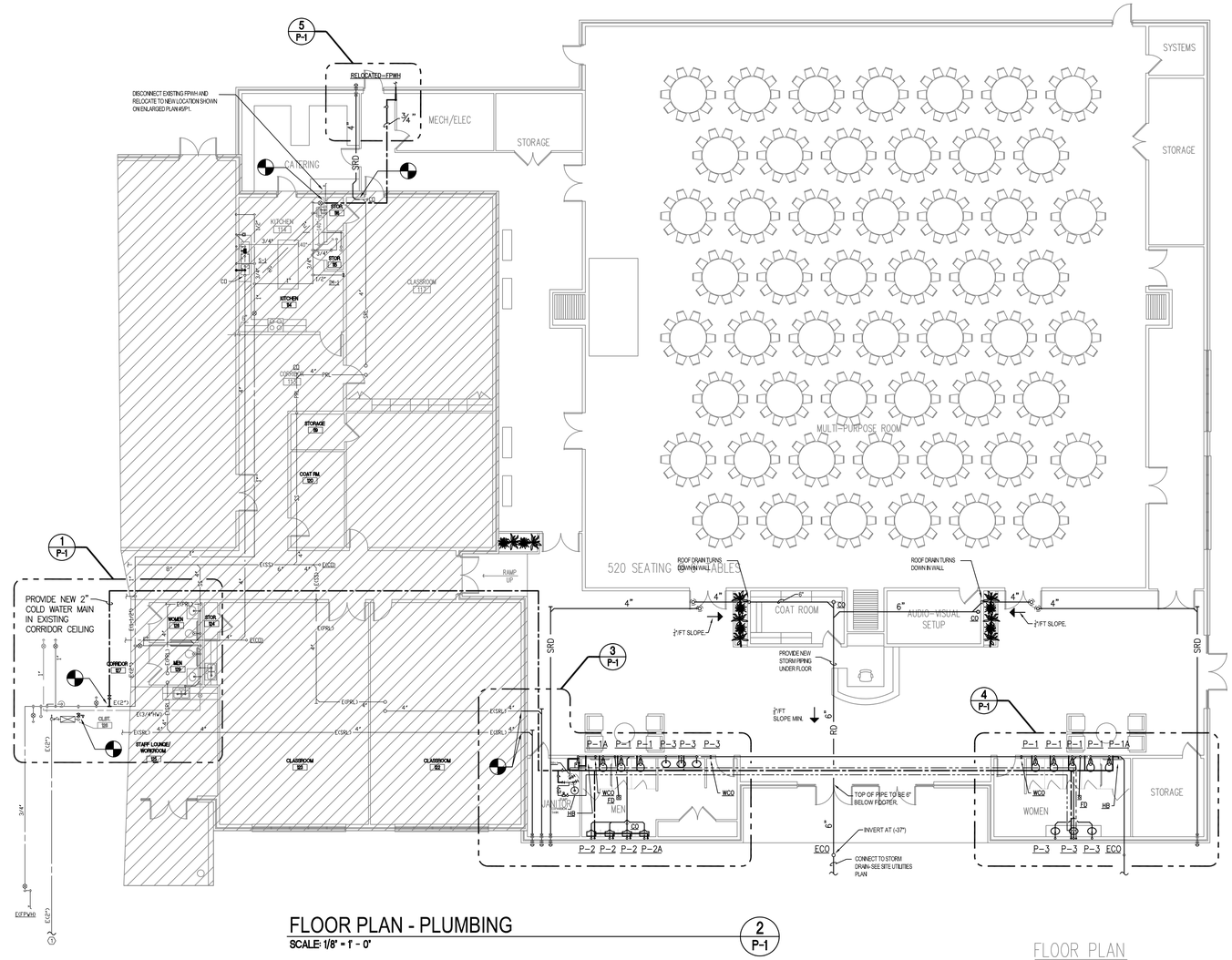

FLOOR PLAN - PLUMBING (2 / P-1)

SCALE: 1/8" = 1' - 0"

FLOOR PLAN

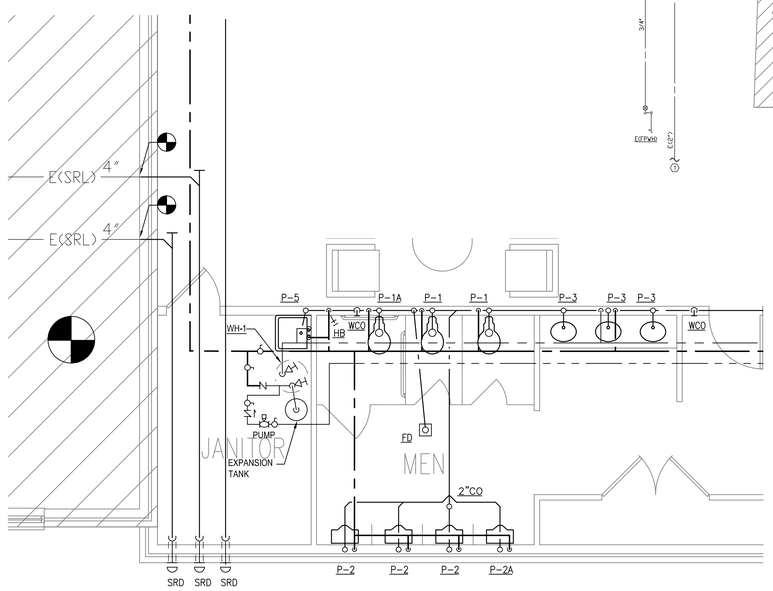

ENLARGED PLUMBING PLAN (3 / P-1)

SCALE: 1/4" = 1' - 0"

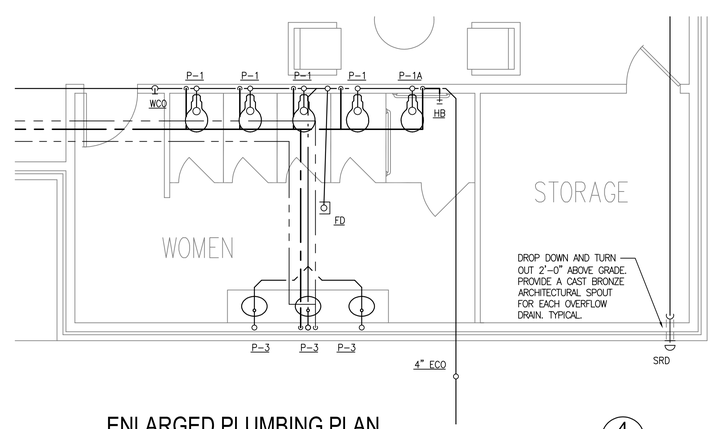

ENLARGED PLUMBING PLAN (4 / P-1)

SCALE: 1/4" = 1' - 0"

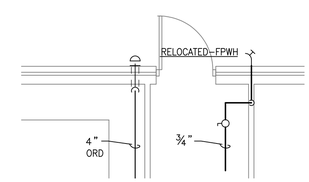

ENLARGED PLUMBING PLAN (5 / P-1)

SCALE: 1/4" = 1' - 0"

STATE OF KENTUCKY
CHARLES MATTHEW CLUB
16390
LICENSED PROFESSIONAL ENGINEER

TECHNICAL HORIZONS
Industrial • Commercial • Institutional
501 Darby Creek, Ste. 31, Lexington, KY
859.253.0363

BUILDING ADDITION TO THE CORBIN CENTER

CORBIN, KENTUCKY

REVISION	DATE

DESIGN DOCUMENTS

The design professional assers sole and all responsibility and liability for problems which arise from failure to follow the plans, specifications and other design information.

PROJECT NO.	4057-00
DESIGNED BY	RWS
DRAWN BY	RWS
CHECKED BY	RWS
REVIEWED BY	CME
DATE	COMMERCIAL

MSE OF KENTUCKY, INC.
Engineers Architects Planners
624 Wellington Way
Lexington, KY 40503
www.msekentucky.com
Phone: (859)223-5694
Fax: (859)223-2607

DRAWING NO.

P-1

SHEET OF

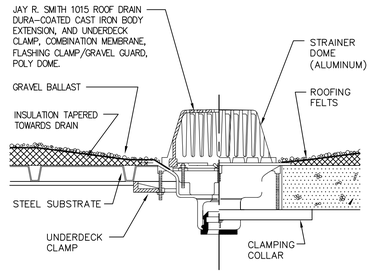

ROOF DRAIN DETAIL (RD)

NO SCALE

1 / P-2

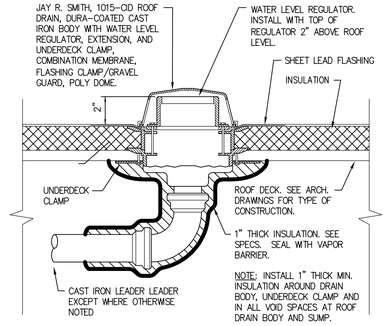

SECONDARY ROOF DRAIN INSTALLATION DETAIL (SRD)

NO SCALE

2 / P-2

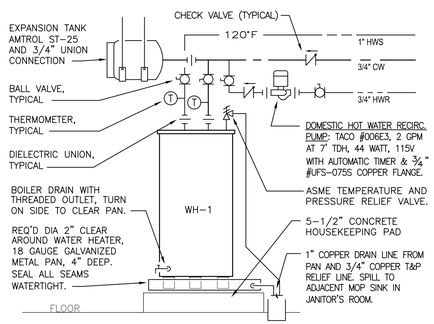

NOTES:

1. SET WATER HEATER THERMOSTAT(S) TO DELIVER 120°F HOT WATER TEMPERATURE.
2. DO NOT INSTALL WATER HEATER INTO DRAIN PAN. PROVIDE BRICK OR OTHER MEANS TO ELEVATE BOTTOM OF WATER HEATER ABOVE EDGE OF PAN.

WATER HEATER #1 PIPING SCHEMATIC

NO SCALE

3 / P-2

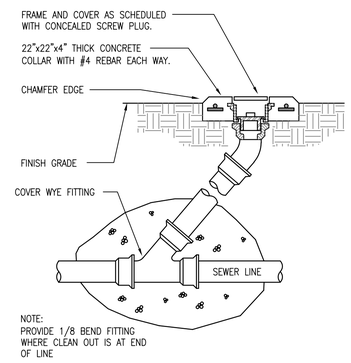

EXTERIOR CLEANOUT (ECO) DETAIL

NO SCALE

4 / P-2

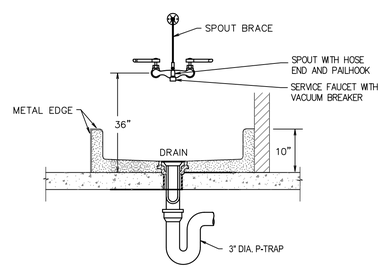

MOP SINK DETAIL

NO SCALE

5 / P-2

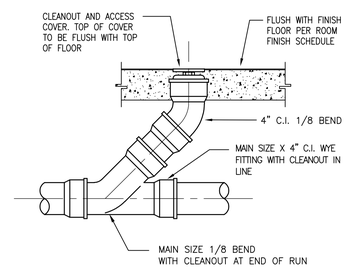

FLOOR CLEANOUT (CO)

NO SCALE

6 / P-2

PLUMBING GENERAL NOTES

1. CONTRACTOR SHALL BE RESPONSIBLE FOR VERIFYING LOCATIONS AND CONDITIONS OF ALL EXISTING SYSTEMS BEFORE CONSTRUCTION BEGINS. MAKE ALL PLUMBING CONNECTIONS TO SUCH SYSTEMS INCLUDING BUT NOT LIMITED TO, GAS, DOMESTIC WATER, SEWER, VENT, ETC..
2. CONTRACTOR SHALL MAKE ALL NECESSARY PLUMBING CONNECTIONS TO EXISTING SYSTEMS PER KENTUCKY PLUMBING CODE, NFPA AND LOCAL GAS, SEWER AND WATER STANDARDS TO ASSURE ALL NEW INSTALLATIONS ARE COMPLETE AND IN WORKING ORDER.
3. THERE IS A EQUIPMENT VENDER FOR THIS PROJECT THAT WILL BE SUPPLYING EQUIPMENT THAT REQUIRES PLUMBING CONNECTIONS. CONTRACTOR SHALL COORDINATE WITH VENDER PRIOR TO STARTING PROJECT AND INSTALL ALL NECESSARY PLUMBING FOR SUCH EQUIPMENT.
4. THE FIXTURE ROUGH-INS AND THEIR LOCATIONS FOR ALL CONNECTIONS ARE ACCURATE TO THE BEST OF OUR KNOWLEDGE. IN SOME INSTANCES THE OWNER OR SUPPLIER MAY MAKE SUBSTITUTIONS OR THE FIXTURE MAY VARY FROM WHAT IS SHOWN. THEREFORE, THESE ITEMS SHALL BE VERIFIED WITH THE SUPPLIER. THE ARCHITECT/ENGINEER SHALL BE IMMEDIATELY NOTIFIED, PRIOR TO CONSTRUCTION, OF ANY DEVIATIONS FROM WHAT IS SHOWN OR IMPLIED ON THESE DRAWINGS. FAILURE OF THE APPROPRIATE CONTRACTOR TO VERIFY ROUGH-INS OR THEIR LOCATIONS SHALL PLACE THE RESPONSIBILITY FOR ANY SUBSEQUENT RELOCATION AND/OR ADDITIONAL ROUGH-INS DIRECTLY UPON THE CONTRACTOR.
5. CONTRACTOR SHALL SUPPLY TO THE ARCHITECT EIGHT COPIES OF SHOP DRAWINGS FOR APPROVAL SO THE QUALITY OF INTENDED MATERALS OR EQUIPMENT CAN BE REVIEWED BEFORE INSTALLATION.
6. DO NOT SCALE THESE DRAWINGS. REFER TO ARCHITECTURAL FLOOR PLAN FOR BUILDING DIMENSIONS.
7. THE SUBMISSION OF A PROPOSAL WILL BE CONSIDERED AS EVIDENCE THAT THE CONTRACTOR HAS FAMILIARIZED HIMSELF WITH THE PLANS AND BUILDING SITE. CLAIMS MADE SUBSEQUENT TO THE PROPOSAL FOR MATERIALS AND LABOR BECAUSE OF DIFFICULTIES ENCOUNTERED WILL NOT BE RECOGNIZED, IF THEY COULD HAVE BEEN FORESEEN HAD PROPER EXAMINATION BEEN MADE.
8. PLUMBING CONTRACTOR SHALL INSTALL ALL SOIL AND WASTE PIPING WITH A MINIMUM SLOPE OF 1/8" PER FOOT UNLESS OTHERWISE REQUIRED BY THE STATE OR LOCAL ADMINISTRATIVE AUTHORITY.
9. FURNISH & INSTALL 1/2" (MIN.) FIBERGLASS INSULATION WITH ALL SERVICE JACKET ON ALL HOT & COLD WATER LINES ABOVE SLAB.
10. MATERALS, EQUIPMENT, ASSEMBLIES AND SYSTEMS SHALL MEET ALL PERTINENT REQUIREMENTS OF NATIONALLY RECOGNIZED TESTING ORGANIZATION SUCH AS THE UL, ASTM, ASSE, AWWA AND NFPA.
11. ALL VENT PIPE TO BE COMPATIBLE WITH STRUCTURE, MECHANICAL EQUIPMENT AND DUCTWORK, ELECTRICAL EQUIPMENT AND LIGHTING.
12. THE CONTRACTOR SHALL COOPERATE FULLY AMONG THE TRADES.
13. ALL EQUIPMENT, FIXTURES AND MATERIALS SHALL BE OF NEW AND UNUSED CONDITION, EQUIPMENT SHALL BE INSTALLED IN STRICT CONFORMANCE TO MANUFACTURER'S RECOMMENDATIONS (U.O.N.). PROVIDE COMPLETE WITH ALL TRIM, STOPS, HANGERS, CARRIERS, SUPPORTS, ETC. INCLUDING PROVISION FOR THE HANDICAPPED, IF REQUIRED. WHERE FIXTURES ARE ACCESSIBLE TO THE HANDICAPPED, FIXTURES MUST COMPLY WITH ALL FEDERAL A.D.A. REGULATIONS.
14. THE POTABLE WATER SUPPLY SHALL BE PROTECTED AGAINST BACKFLOW AND SIPHONAGE BOTH NATURAL AND INDUCED. ALL EQUIPMENT CONNECTED TO THE POTABLE WATER SYSTEM BEING CAPABLE OF POLLUTING OR CONTAMINATING THE POTABLE WATER DISTRIBUTION SYSTEM OR ANY PART THEREOF BY MEANS OF A REVERSAL OF FLOW, PRESSURE DROP, PRESSURE LOSS, INDUCED VACUUM OR BY INJECTION BECAUSE OF ANY PRIMARY OR AUXILIARY PUMPING SYSTEM CONNECTED THERETO MUST BE ISOLATED AND CONTAINED BY MEANS OF APPROVED BACKFLOW DEVICES, CHECK VALVES, AIR GAPS OR VACUUM BREAKERS. PLUMBING CONTRACTOR SHALL FURNISH AND INSTALL THESE DEVICES PER LOCAL CODE REQUIREMENTS.
15. ALL ROOF PENETRATIONS SHALL BE MADE IN ACCORDANCE WITH ROOF SYSTEM MANUFACTURER'S GUIDELINES. COORDINATE WITH ARCHITECTURAL DETAILS FOR ROOF SYSTEM USED.
16. FURNISH AND INSTALL SHUTOFF OR BALL VALVE AND DIELECTRIC UNION ON ALL HOT AND COLD WATER LINES. PLUMBING CONTRACTOR SHALL MAKE ALL FINAL CONNECTIONS TO PLUMBING FIXTURES. ALL SHUT-OFFS TO BE IN ACCESSIBLE LOCATIONS.
17. PROVIDE CHROME PLATED ESCUTCHEONS AT ALL VISIBLE WALL, CEILINGS AND FLOOR PENETRATIONS.
18. ALL V.T.R'S SHALL BE EXTENDED TO A MINIMUM OF 1' ABOVE ROOF AND MAINTAINED 10'-0" MINIMUM FROM ALL OUTSIDE AIR INTAKES.
19. VERIFY MOUNTING HEIGHTS OF ALL HANDICAP FIXTURES WITH ARCHITECTURAL PLANS.
20. HANDICAPPED LAVATORY P-TRAP AND ANGLE STOP ASSEMBLIES SHALL BE INSULATED WITH TRAP WRAP PROTECTIVE KIT 500R BY BROCAR (1-800-827-1207) OR EQUAL. ABRASION RESISTANT EXTERIOR COVER SHALL BE SMOOTH AND HAVE 1/8" MIN. WALL OVER CUSHIONED FOAM INSERT. FASTENERS SHALL REMAIN SUBSTANTIALLY OUT OF SIGHT.
21. BIDDERS SHALL BE LICENSED CONTRACTORS IN ACCORDANCE WITH LOCAL AND STATE LAWS.
22. ALL INSTALLED SYSTEMS, DEVICES AND RELATED ITEMS SHALL BE TESTED IN PLACE ON SITE. REPLACE ANY AND ALL CONTRACTOR SUPPLIED DEFECTIVE DEVICES, ITEMS OR SYSTEMS AT CONTRACTOR'S OWN EXPENSE BEFORE COMPLETION OF PROJECT.
23. ALL PERMITS AND FEES REQUIRED FOR THE WORK SHALL BE SECURED AND PAID FOR BY THE CONTRACTOR AND INCLUDED IN THE BID PRICE.
24. THE WATER PIPING SYSTEM SHALL BE FLUSHED AND STERILIZED IN ACCORDANCE WITH LOCAL REGULATIONS.

PLUMBING SYMBOLS AND ABBREVIATIONS

NOTE:
SOME SYMBOLS SHOWN IN THIS LEGEND MAY NOT NECESSARILY BE USED FOR THIS PROJECT.

- DEMOLISH PIPING
- E(SAN) — EXISTING SOIL AND WASTE PIPING
- SAN — SOIL AND WASTE PIPING
- V — VENT PIPING
- COLD WATER PIPING (CW)
- HOT WATER PIPING (HW)
- HW RECIRC. PIPING (HWR)
- G — NATURAL GAS PIPING
- K — KITCHEN GREASE WASTE PIPING
- VTR — VENT-THRU-ROOF
- UNION
- BALL VALVE
- THERMOSTATIC VALVE OR MIXING VALVE
- CLEANOUT
- SOLENOID VALVE
- PRESSURE REDUCING VALVE
- CHECK VALVE OR BACKFLOW PREVENTER
- AFF — ABOVE FINISHED FLOOR
- AFG — ABOVE FINISHED GRADE
- MFR — MANUFACTURER
- GPM — GALLONS PER MINUTE
- NIC — NOT IN CONTRACT
- PRL — PRIMARY ROOF LEADER
- SRL — SECONDARY ROOF LEADER
- CONNECT TO EXISTING
- POINT OF DEMOLITION
- FREEZE PROOF WALL HYDRANT
- HOSE BIBB
- X — DETAIL IDENTIFIER
- P-X — SHEET REFERENCE

STATE OF KENTUCKY
CHARLES MATTHEW ELLIS
19390
LICENSED
PROFESSIONAL ENGINEER

TECHNICAL HORIZONS
Industrial • Commercial • Institutional
501 Darby Creek, Ste. 31, Lexington, KY
859.252.5363

BUILDING ADDITION TO THE CORBIN CENTER
CORBIN, KENTUCKY

DATE	REVISION	BY

DESIGN DOCUMENTS:
The design professional waives any and all responsibility and liability for problems which arise from failure to follow the plans, specifications and the design intent they convey.

PROJECT NO.	4437-00
DESIGNED BY	RWS
DRAWN BY	RVS
CHECKED BY	CMF
REVIEWED BY	CMF
DATE	[illegible]

MSE OF KENTUCKY, INC.
Engineers Architects Planners
624 Wellington Way
Lexington, KY 40503
www.msekentucky.com
Phone: (859)223-5694
Fax: (859)223-2607

DRAWING NO.
P-2

PLUMBING FIXTURE SCHEDULE

MARK	ITEM	HW	CW	WASTE	DESCRIPTION
P–1	FLOOR MOUNTED FLUSH VALVE WATER CLOSET (UNIVERSAL HEIGHT)	––	1"	4"	AMERICAN STANDARD #3043001.020 MADERA TOP SPUD ELONGATED BOWL "RIGHT HEIGHT", FLOOR MOUNT WITH OPEN FRONT SEAT, NO COVER. PROVIDE #60475M161.002 ULTIMA TOUCHLESS 1.6 GPF SENSOR PISTON FLUSH VALVE. PROVIDE CHROME PLATED SUPPLY AND ESCUTCHEON.
P–1A	FLOOR MOUNTED FLUSH VALVE WATER CLOSET (SUITABLE FOR ADA)	––	1"	4"	SAME AS FIXTURE P–1
P–2	URINAL	––	3/4"	2"	AMERICAN STANDARD ALLBROOK #6550001.020 WALL HUNG, TOP SPUD SLOAN #8186 G2 OPTIMA PLUS BATTERY SENSOR FLUSH VALVE WITH H–573–A CP, STOP CAP / FRICTION RING ASM; 3/4" TOP SPUD, 1.0 GPM / FLUSH, STRAINER. WALL HUNG WITH FLOOD RIM MOUNTED AT 24" AFF.
P–2A	URINAL	––	3/4"	2"	SAME AS FIXTURE P–2; MOUNT FLOOD RIM AT 17" AFF
P–3	LAVATORY (SELF RIMMING VIT. CHINA)	1/2"	1/2"	1–1/4"	AMERICAN STANDARD COLONY #0346403.020 DROP–IN, WHITE VITREOUS CHINA. PROVIDE DELTA 501 FAUCET AND CHROME TRIM INCLUDING GRID DRAIN; PROVIDE CHROME PLATED SUPPLIES, STOPS AND ESCUTCHEONS.
P–5	MOP SINK	––	1/2"	3"	MUSTEE 63M FLOOR MOUNTED DURASTONE MOP BASIN 24" X 24" X 10" HIGH. PROVIDE SPEAKMAN #SC–5811–RCP SERVICE SINK FAUCET WITH VACUUM BREAKER. MOUNT FAUCET 36" ABOVE FINISHED FLOOR. PROVIDE DRAIN STRAINER, SPOUT BRACE, BUMPER GUARD, FILL HOSE, HOSE HANGER AND MOP HANGER ACCESSORIES.
FD	FLOOR DRAIN	––	––	LINE SIZE	JAY R SMITH, ZN415 SERIES, DUCO CAST IRON BODY, 1/2" TRAP PRIMER CONNECTION WITH 6" SQUARE POLISHED NICKEL–BRONZE STRAINER
CO	CLEANOUT	––	––	LINE SIZE	ZURN 1400 SERIES DUCO CAST IRON BODY WITH ROUND HEAVY DUTY SCORIATED POLISHED BRONZE TOP. ADJUSTABLE TO FLOOR LEVEL AFTER CONCRETE HAS SET.
ECO	EXTERIOR CLEANOUT	––	––	LINE SIZE	ZURN 1400 SERIES DUCO CAST IRON BODY WITH ROUND HEAVY DUTY ENAMEL COATED DUCTILE IRON TOP. ADJUST LEVEL TO CONCRETE APRON. SEE DETAIL THIS SHEET.
RD	ROOF DRAIN	––	––	4"	J R SMITH ROOF DRAIN. SEE DETAIL #1/P–2
SRD	OVERFLOW DRAIN	––	––	4"	J R SMITH SECONDARY (OVERFLOW) ROOF DRAIN. SEE DETAIL #2/P–2. PROVIDE J R SMITH #1770 CAST BRONZE NOZZLE AT WALL TERMINATION.
HB	HOSE BIBB	––	1/2"	––	WOODFORD MODEL 24P–1/2 WITH REMOVABLE KEY HANDLE, VACUUM BREAKER AND POLISHED CHROME FINISH.
FPWH	WALL HYDRANT	––	3/4"	––	WOODFORD MODEL 65C, AUTOMATIC DRAINING, FREEZELESS, WITH VACUUM BREAKER, LOOSE KEY.

PLUMBING FIXTURE SCHEDULE NOTES:

1. CONTRACTOR SHALL FURNISH AND INSTALL CARRIER FOR EACH FIXTURE WHICH IS WALL HUNG, UNLESS OTHERWISE NOTED. PROVIDE APPROPRIATE CARRIER PER FIXTURE TYPE AND REQUIREMENTS.
2. CONTRACTOR SHALL FURNISH AND INSTALL WATTS, ZURN OR P.P.P. INC. TRAP PRIMERS TO SERVE ALL APPROPRIATE FLOOR DRAINS AND/OR OPEN RECEPTACLES AS REQUIRED.
3. ACCEPTABLE ALTERNATE MANUFACTURERS FOR ITEMS INCLUDING BUT NOT LIMITED TO
   - 3.A. WATER CLOSETS: KOHLER, ELJER, CRANE, MANSFIELD LAVATORIES: SAME AS WATER CLOSETS.
   - 3.B. URINALS: SAME AS WATER CLOSETS.
   - 3.C. FLOOR DRAINS AND CLEANOUTS: WADE, ZURN, PLASTIC ODDITIES.
   - 3.D. WATER HEATERS: LOCHINVAR, PVI, HESCO.
   - 3.E. HOSE BIBBS/WALL HYDRANTS: ZURN, CHICAGO FAUCET, T&S BRASS.
4. ENCLOSE ALL EXPOSED SUPPLIES AND P–TRAPS OF BARRIER FREE LAVATORIES WITH A PROTECTIVE INSULATING MATERIAL AND A SMOOTH JACKET (TRAP–WRAP OR EQUAL).
5. SHOCK ARRESTORS FOR BRANCH PIPING TO FIXTURES WITH QUICK CLOSING VALVES SHALL BE BY P.P.P. INC., ZURN (OR EQUAL), SIZED PER PDI REQUIREMENTS.

WATER HAMMER ARRESTOR SCHEDULE

PDI UNITS	A	B	C
FIXTURE UNITS	1–11	12–32	33–60

DOMESTIC WATER HEATER SCHEDULE

MARK	BRADFORD WHITE MODEL#	TANK SIZE	RECOVERY @70° F RISE	INPUT POWER	HT.	DIA.	ELECTRICAL		REMARKS
							FLA	VOLTS/ø	
WH–1	RE340S6	40 GAL.	27 GPH	(2)4.5 KW	49"	22"	22	208/1	1, 2, 3

REMARKS:
1. FURNISH WITH ASME TEMPERATURE GAUGE.
2. TEMPERATURE CONTROL WITH HIGH TEMP CUT OFF.
3. HEATER ELEMENTS SHALL BE WIRED FOR NON–SIMULTANEOUS OPERATION.

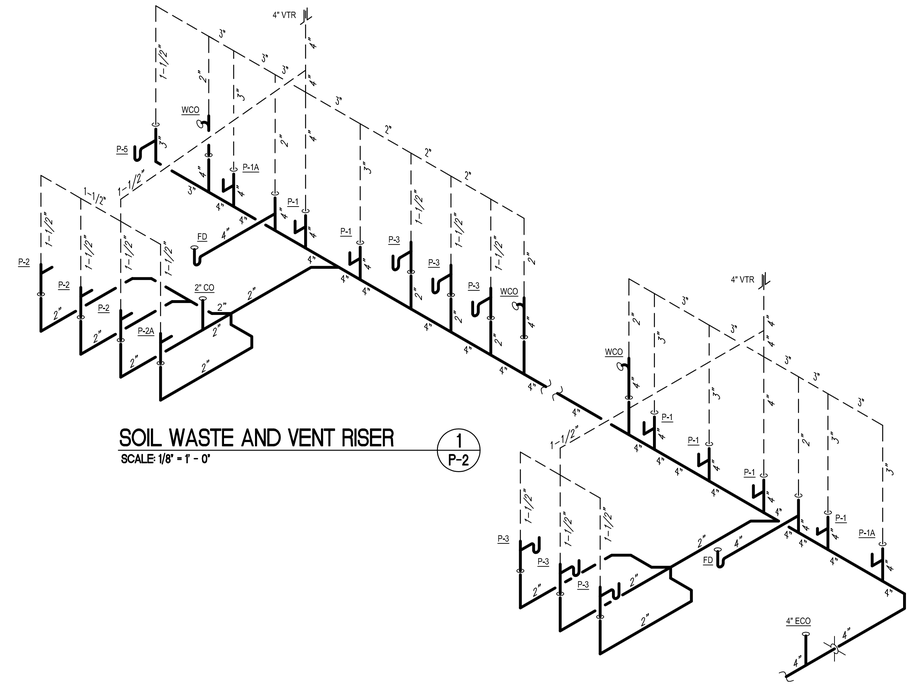

SOIL WASTE AND VENT RISER (1 / P-2)
SCALE: 1/8" = 1' - 0"

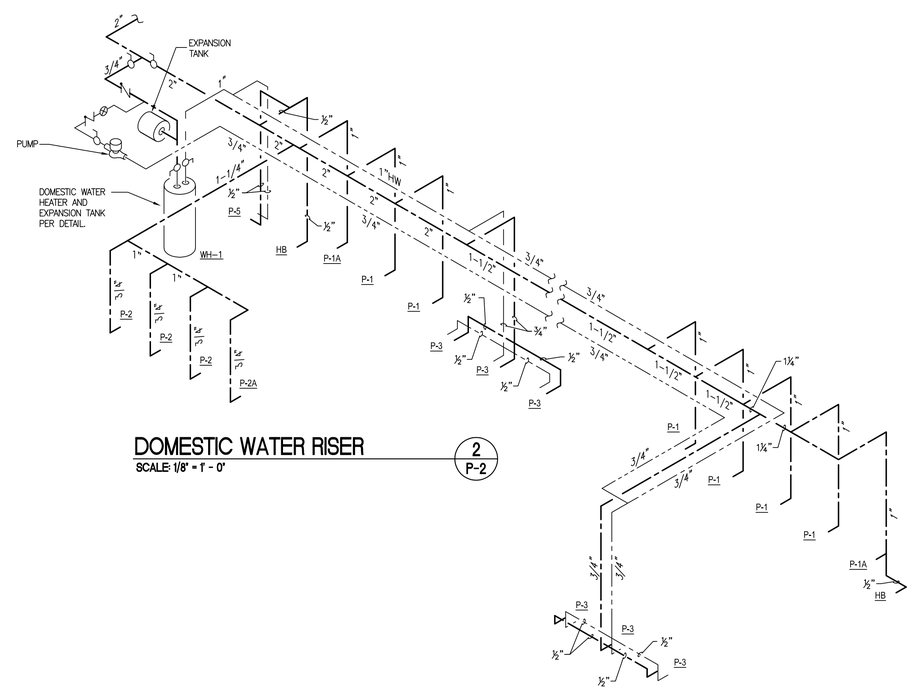

DOMESTIC WATER RISER (2 / P-2)
SCALE: 1/8" = 1' - 0"

STATE OF KENTUCKY
CHARLES MATTHEW ELLIS
15390
LICENSED PROFESSIONAL ENGINEER

TECHNICAL HORIZONS
Industrial • Commercial • Institutional
501 Darby Creek, Ste. 31, Lexington, KY
859.254.3363

BUILDING ADDITION TO
THE CORBIN CENTER
CORBIN, KENTUCKY

DATE	REVISION	BY

DESIGN DOCUMENTS
The design professional severs and all responsibility and liability for problems which arise from failure to follow the plans, specifications and this design intent they convey.

PROJECT NO.	4057-00
DESIGNED BY	RWS
DRAWN BY	RVS
CHECKED BY	RVS
REVIEWED BY	CME
DATE	08/08/2007

MSE OF KENTUCKY, INC.
Engineers Architects Planners
624 Wellington Way
Lexington, KY 40503
www.msekentucky.com
Phone: (859)223-5694
Fax: (859)223-2607

DRAWING NO.
P-3
SHEET OF

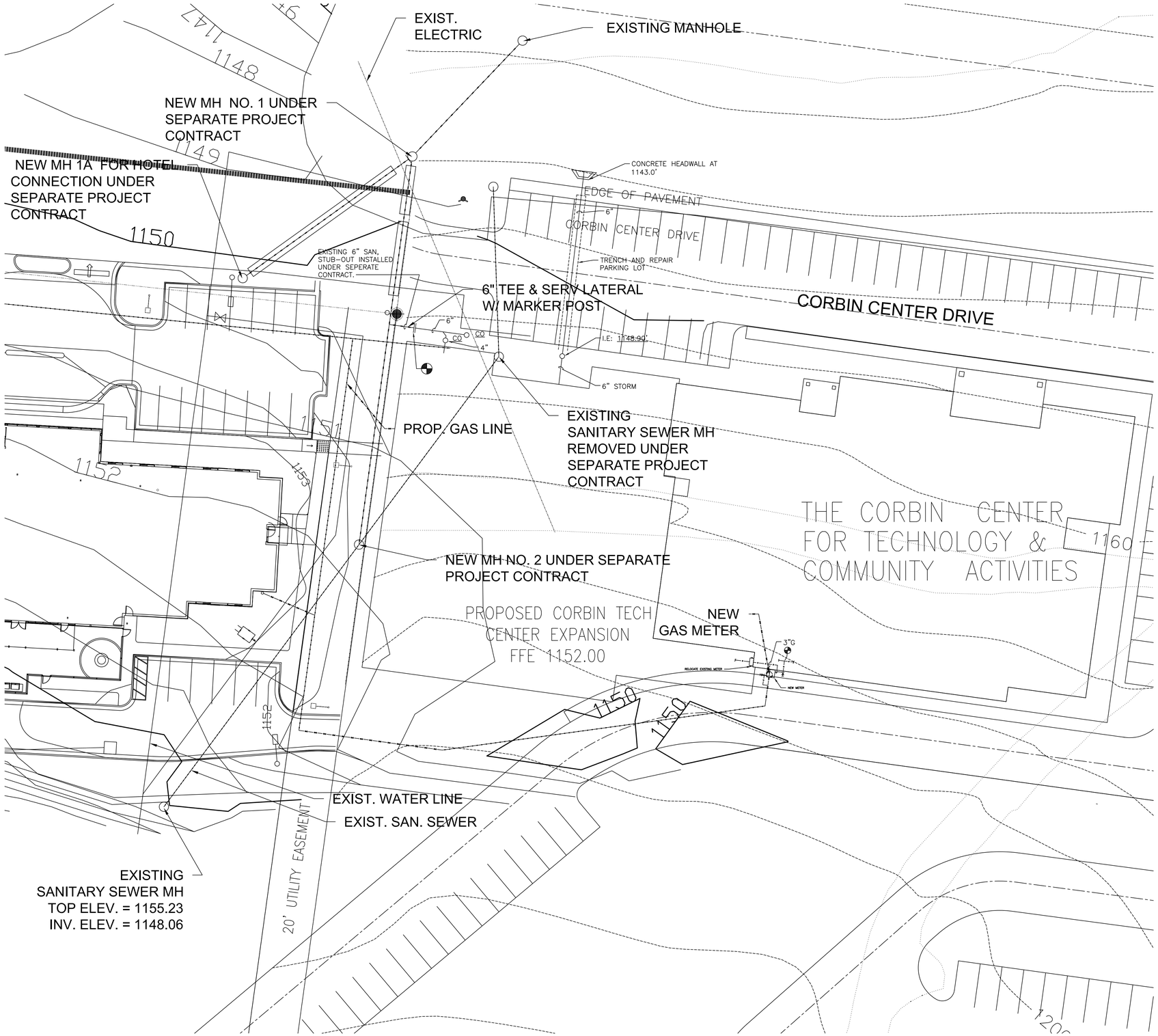

SITE UTILITY PLAN - MECHANICAL

SCALE: 1" = 20'-0"

1 / U-1

GENERAL NOTES:

1. DO NOT SCALE FROM PLANS. FIELD VERIFY ALL REQUIRED DIMENSIONS.

2. OBSERVE OSHA AND ALL OTHER SAFETY STANDARDS AND GUIDES.

3. FEDERAL, STATE, LOCAL, MUNICIPAL, AND UTILITY COMPANY CODES, RULES, REGULATIONS AND REQUIREMENTS APPLY UNLESS EXCEEDED BY THIS DESIGN.

4. WHEN INTERRUPTION OF AN EXISTING UTILITY OR SERVICE IS PLANNED OR OCCURS ACCIDENTALLY, THE CONTRACTOR(S) SHALL WORK CONTINUOUSLY AS NEEDED TO RESTORE SAME; PROVIDING PREMIUM TIME AS NEEDED AT NO INCREASE IN CONTRACT PRICE.

5. PLANNED INTERRUPTION OF ANY SERVICE SHALL BE COORDINATED WITH THE APPROPRIATE MUNICIPALITY AND/OR UTILITY COMPANY, THE ARCHITECT AND THE BUILDING OPERATOR'S AT LEAST ONE WEEK IN ADVANCE OF ANTICIPATED INTERRUPTION. A SCHEDULE FOR THESE OUTAGES SHALL BE DEVELOPED AND AGREED UPON BETWEEN THE PARTIES MENTIONED TO AVOID UNNECESSARY INCONVENIENCE TO THE OWNER OR ANY AFFECTED PARTY. NOTIFY THE UTILITY COMPANY OF ANY ANTICIPATED SERVICES REQUIRED FROM THEM AT LEAST TWO WEEKS IN ADVANCE IN WRITING AND ENSURE THAT THEY DO NOT DELAY WORK.

6. LOCATIONS, DEPTHS, MATERIAL TYPES, ELEVATIONS, ETC. OF ALL APPURTENANCES, LINES, BUILDINGS, ETC. INDICATED ON THIS DRAWING WERE TAKEN FROM VARIOUS SOURCES AND ARE DIAGRAMMATIC ONLY. CERTAIN EXISTING CONDITIONS MAY NOT BE INDICATED. THE CONTRACTOR PROPOSING TO DO ANY PART OF THE WORK INDICATED SHALL VISIT THE SITE AND DETERMINE ALL ITEMS WITH WHICH HE MUST COORDINATE TO INSTALL THE INDICATED WORK.

7. BURY WATER AND FIRE SUPPRESSION SERVICE 36" MINIMUM BELOW GRADE. INSTALL AS PER THE LOCAL WATER COMPANY/DISTRICT REGULATIONS.

8. THE CONTRACTOR SHALL INSTALL ALL SANITARY SEWER LINE WORK IN ACCORDANCE WITH ALL MUNICIPALITY REQUIREMENTS.

9. THE WATER LINES SHALL BE DISINFECTED BY APPROVED CHLORINATION METHODS AND FLUSHED THOROUGHLY BEFORE BEING PLACED INTO SERVICE. BACTERIA TESTING WILL BE REQUIRED IN ACCORDANCE WITH THE DIVISION OF WATER STANDARDS. ALL TESTING AND DISINFECTION WORK SHALL BE PERFORMED IN ACCORDANCE WITH KENTUCKY DIVISION OF WATER REQUIREMENTS.

SINGLE PIPES	
TRENCH WIDTH	
PIPE SIZE	"X"
4" THRU 12	30"
14" THRU 18"	36"
20" THRU 24"	42"
26" THRU 36"	54"

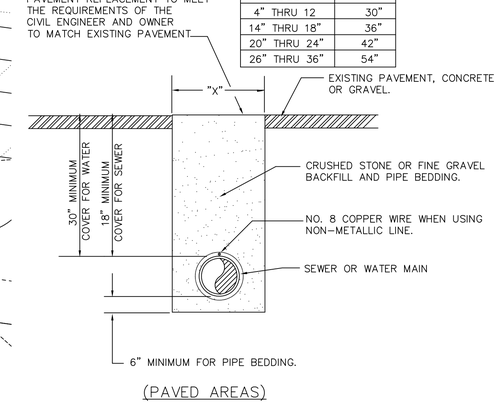

(PAVED AREAS)

TRENCHING AND BACKFILLING

NO SCALE

NOTE:
CUTTING AND REPAIRING EXISTING PAVEMENT, CONCRETE OR GRAVEL SHALL BE IN ACCORDANCE WITH OWNERS REQUIREMENTS.

STATE OF KENTUCKY
CHARLES MATTHEW PULIS
16390
LICENSED PROFESSIONAL ENGINEER

BUILDING ADDITION TO THE CORBIN CENTER
CORBIN, KENTUCKY

DATE	REVISION	BY

DESIGN DOCUMENTS:
The design professional waives any and all responsibility and liability for problems which arise from failure to follow these plans, specifications and the design intent they convey.

PROJECT NO.	
DESIGNED BY	
DRAWN BY	RVS
CHECKED BY	RVS
REVIEWED BY	CME
DATE	
SCALE	

MSE OF KENTUCKY, INC.
Engineers Architects Planners
624 Wellington Way
Lexington, KY 40503
www.mselex.com
Phone: (859)223-5694
Fax: (859)223-2607

DRAWING NO.

U-1

SHEET OF